Spring March 30, 2017

A Multi-Vision Energy Management Strategy for Smart Grids Using Hierarchical Distributed Model Predictive Control

Ahmed A. Shetaya, *Helwan University*
Dr. Rash El-Azab, *Helwan University*
Prof. Dr. Amr M. Amin
Prof. Dr. Omar H. Abdalla, *Helwan University*

A Multi-Vision Energy Management Strategy for Smart Grids Using Hierarchical Distributed Model Predictive Control

Ahmed A. Shetaya, *Student Member, IEEE,* Rasha El-Azab, Amr M. Amin, Omar H. Abdalla, *Life SMIEEE*
Electrical Power and Machines Engineering Department
Faculty of Engineering, Helwan University
Cairo, Egypt
ahmed.shetaya@h-eng.helwan.edu.eg, r_m_elazab@yahoo.com, amrmaamin@yahoo.com, ohabdalla@ieee.org

***Abstract*—This paper introduces a proposed architecture of energy management strategy for smart grids which have high renewable energy penetration. The proposed strategy is based on a hierarchal distributed model predictive control to allocate computational optimization tasks of the entire smart grid to hierarchal layers with multi-vision time-frames. The suggested strategy layers have three layers. The upper layer performs supervision management role for the entire grid. The medium layer organizes coordination management role for divided power system areas. In the lower layers, the control agent regulates the zonal physical sub-system in each area. The developed strategy helps to increase the high share of variable renewable sources with optimal performance.**

***Keywords*—Energy management system, renewable energy resources, model predictive control, smart grid.**

I. Introduction

The operation of power systems with highly Renewable Energy Resources (RES) penetration is the most challenging problem against increasing infeed of RES in the modern grids. The uncertain and variable productions of RES reduce the system flexibility of the power system and may lead to unpredicted control action in dispatching the power among the generation units. In this case, the power system becomes less reliable and lower secure during solving the dispatching optimization problem [1-2].

Power system operators keep the balance of electricity source and load within geographic limits known as balancing areas. To cope with the uncertain nature of the intermittent sources such as wind generation, the energy balancing area should be larger. In addition, the scheduling and dispatching frequency should be greater to reach the real-time optimized operation. Additionally, the planner should consider the large geographical distribution of RES establishment. Correspondingly, the market operation should be a liquid real-time market operation while it is easy to execute trading at required price. Nevertheless, the demand response must be flexible to react with the variability challenging [3]. To deal with these issues, a smart, distributed, multi-vision, non-complex and comprehensive energy management system would be required.

Many researchers have presented techniques for the commitment and dispatching issues via introducing management methods. The control system that introduced in the literature demonstrated the centralized, decentralized and single layer distributed control systems [4-8]. In [4-5], the authors formulate the optimization problem to design optimal dynamic energy management for smart grid taking into consideration the predicted demand and variable renewable sources but in a centralized manner. The centralized control based systems should access all sensors and actuators of the physical system in one central management system. The advantage of the centralized system is the best performance but the issues come from its needs to global high-speed communication, heavy computations, unreliable system, hard to be scalable in addition to unavailable information during restricted control access systems.

Another research effort as pointed out in [6-8] use the single layer centralized control/optimization to cope with the challenges of RES uncertainty. The dynamic programming is decomposed into distributed algorithm and the communication among neighbors is used to share the computational burden [6-7]. The single layer distributed online EMS is introduced in [8]. The suggested technique in that paper realizes the model to maximize the welfare among participants in distributed manner. Although the decentralized/single layer distributed improves the robustness, reliability, quick reaction and communication delay by reducing the computational burden, the single level distributed control optimizes the subsystem control action and ignore the overall system performance. So, sometimes it might not provide the best solution because it searches for the local optimization rather than global optimization [9]

In this paper, in order to overcome the previously mentioned techniques, the hierarchal distributed multi-vision management strategy is proposed. By multi-vision EMS, we mean that the power dispatching criteria is not for individual real-time point on time scale of dispatching but it has a predictive management for future time-frames. The main idea

The work was sponsored by the project titled "Europe Mediterranean Cooperation on Research & Training in Sun Based Renewable Energies," EC Framework Program 7, EC-FP7-ENERGY, 608593, 6.3 M Euro, 2013-1.

is to decompose the central EMS into the central supervisory manager in the first layer, area managers in the second layer and zone managers in the sub-areas by distributing the management objective and time-frame of control among the downstream zone managers. Compared to the previously discussed centralized and distributed techniques, the proposed scheme has the following key advantages: 1) less computational complexity due to the distribution of the tasks between managers; 2) less cost due to low computational burden and usage of fewer communications speed; 3) holistic multi-vision for overall system that helps the grid operator to take proactive decision; 4) high-reliability during single manager fails to operate; 5) goal orientated process with dynamic function; 6) integrative [9].

We consider the grid consists of different levels and contains conventional generation sources, renewable intermittent generation (as the wind and solar sources), Energy Storage Systems (ESSs) and demands. The geographically distributed nature of sources, ESSs and loads depend on the locations of the renewable sources and the demand pattern. Our idea is to divide management system into hierarchical levels distributed from lower level that contains zones managers through area level managers up to supervisory manager level in the top of the hierarchy to manage all interconnected areas. The key feature of Model Predictive Control (MPC) is its ability to optimize the input in current time sample, while considering future time sample into consideration. The proposed scheme has the ability to overcome the uncertainty and variability of the renewable intermittent sources [10].

The remainder of the paper is arranged as follows. In section II, the hierarchal system modeling is presented. The problem formulation is introduced in section III. The overall system architecture to show how the communication between managers work is discussed in section IV. In section VI, the detailed information and roles among managers are introduced as a smart grid application. Finally, section VII summarizes the main conclusions.

II. Hierarchical Management Structure and Modelling

A. Hierarchical Management System Architecture

The hierarchical atructure of large systems consists of multi-layer systems so that the computational control efforts can be assigned to subsystems. In Fig. 1, the overall supra-system is divided into smaller systems and each system contains subsystems. The overall supra-system is managed by the Supervisory Manager *SM* in the first layer and it has lower frequency scanning or in other meaning, it provides the control action with low frequency. The supervisory manager gets feedback from the second system layer and provides the control action to the Coordination Managers *CM1* and *CM2*. The coordination managers optimize and control each system and provide the control action to the Control Agents *CAs* in the third layer. In addition, the coordination managers can interact with each other without the need for the *MS* and it has medium frequency control actions. In the same manner, the control agents *CA11* and *CA12* belong to *CM1*, while *CA21* and *CA22* belong to *CM2*.

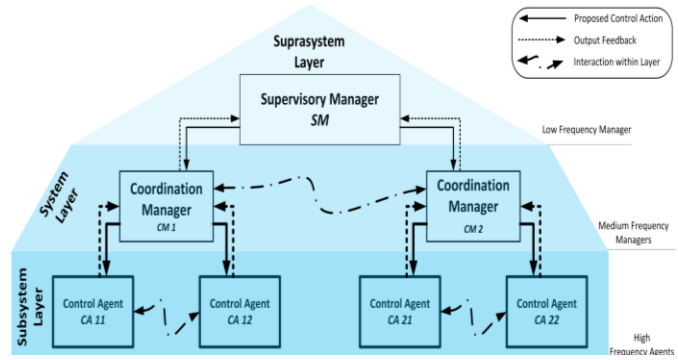

Fig. 1. Hierarchical management structure.

The subsystem layer allows each subsystem to interact with each other. The control agents have high-frequency control action. The main advantage of the proposed hierarchical distributed control system is its ability to distribute the computational burden among control agents and also to manage the system with multi-vision with different time-frame of scanning.

B. Modelling

The MPC depends mainly on Linear Time Invariant (LTI) models. The state-space model is selected here for its simplicity and capability to simulate the power nodes of generation/load units, and also it is easier to implement and does not need complex computation throughout solving large grid problems. So, in all layers of management, modeling is supposed to be in the state space form. The distributed supra-system in Fig. 1 is composed of many systems and each system consists of many subsystems.

Suppose that the supra-system has n distributed systems and managed with the supervisory management *SM*. Each system has n coordination managers CM_i, where $i = 1, 2 \ldots n$ and the lower layer contains m sub-systems with plant control agents CA_j, where $j = 1, 2 \ldots m$. The supra-system model can be expressed as,

$$\begin{cases} x(h+1) = Ax(h) + Bu(h) \\ y(h+1) = Cx(h) \end{cases} \tag{1}$$

The overall aggregated system model is expressed in (1), where $x(h)$ is the supra-system state vector, $u(h)$ is the controlled input vector and $y(h+1)$ is the predicted output vector. A, B, and C are the supra-system matrices depending on system parameters and h is the sampling instant of the low-frequency management of the supra-system manager *SM*.

On the other hand, the systems layer model is distributed among n managers/controllers. Each physical system interacted with its neighbors and the systems' managers called the coordination managers. The system model is expressed as follows,

$$\begin{cases} x_i(g+1) = A_{ii}x_i(g) + B_{ii}u_i(g) + \sum_{l=1, l\neq i}^{n} (A_{il}x_l(g) + B_{il}u_l(g)) \\ y_i(g+1) = C_{ii}x_i(g) + C_{il}x_l(g) \end{cases} \tag{2}$$

Where $x_i(g)$ is a vector of the states of a system i at the sample g, $u(g)$ is the control input vector for the ith system in the

supra-system *SM* and $y_i(g+1)$, is the predicted output vector of the system *i*. A_{ii}, B_{ii} and C_{ii} are matrices of the ith system model parameters. The interaction of the ith system and its neighbor l^{th} systems is expressed in the same equation to represent the effect of the interconnected systems in the supra-system. $x_l(g)$ and $u_l(g)$ are the states and inputs of the lth systems respectively, that directly interconnected with the ith system. The matrices A_{il}, B_{il} and C_{il} are functions of the parameters of the interconnections between i^{th} and l^{th} systems.

In the third layer of the hierarchical management structure, each system manager guides control agent *m* for sub-systems under commanding of the coordination manager. The third level also has a physical interconnection between sub-system under the same system on the second level as illustrated in Fig. 1. Similar to the second layer, the third layer model is represented as follows,

$$\begin{cases} x_j(k+1) = A_{jj}x_j(k) + B_{jj}u_j(k) + \sum_{q=1,q\neq j}^{m}(A_{jq}x_q(k) + B_{jq}u_q(k)) \\ y_j(k+1) = C_{jj}x_j(k) + C_{jq}x_q(k) \end{cases} \quad (3)$$

Where $x_j(k)$, $u_j(k)$ and $y_j(k+1)$ are the states, manipulated inputs and predicted outputs of the subsystem *j* in the system *i* at the sample *k*, respectively. The self-subsystem parameters are expressed by the matrices A_{jj}, B_{jj} and C_{jj}. The physical interaction impact of qth neighbor sub-systems states and inputs are $x_q(k)$ and $u_q(k)$, and the interaction parameters are represented by matrices A_{jq}, B_{jq} and C_{jq}.

For simplifying the complexity of modeling the three layers, we consider the supra-system representing the comprehensive generation/load model [5], [11]. Figure 2 shows the main principle of the comprehensive model. Each energy generation, load, storage unit is represented by a node to inject or absorb power to or from the grid. If the generation or load node buffers the power, so the state of charge of the node *C* is *SOC*. If the node is represented as a generation and the generated power P_g is less than the infeed *d*, so the rest of original power is called curtailment P_{cur}.

On the other hand, if it is represented as load and the actual load P_L is less than infeed load *d*, so the rest is called the power shedding. P_{loss} represents the losses during storing energy. The general model is expressed in (4) for the zth node. It can be applied on each generation/load or storage type and that in the case of aggregated overall supra-system, areas systems or grid zones sub-systems.

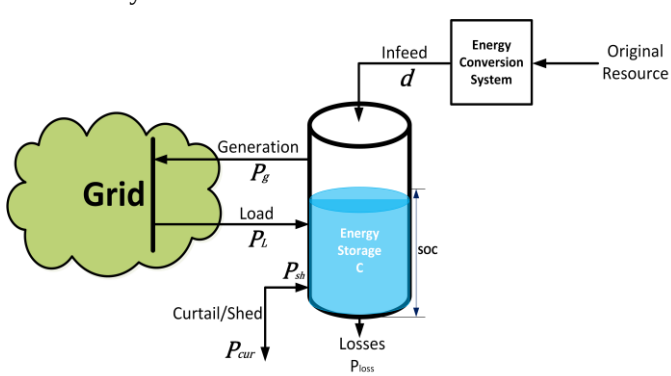

Fig. 2. Comprehensive generation/load model.

$$C_z \dot{SOC}_z = P_{z,L} - P_{z,g} \pm d_{z,g/L} \pm P_{z,cur/sh} - P_{z,loss} \quad (4)$$

For the interconnected network, the balancing power equation between generation and load is illustrated in (5), whereas, the interconnected lines of the power network are expressed in (6). The difference between injected (input) and absorbed (output) power at each bus v is stated.

$$\sum P_g - \sum P_L = 0 \quad (5)$$

$$\sum_v P_{in,v} - \sum_v P_{out,v} = 0 \quad (6)$$

III. Model Predictive Control (MPC)

One of the main challenges in a high RES penetration is the uncertainty and variability during dispatching its power output. Because of the prediction horizon of MPC controller, the systems under uncertainty as RES can take benefits of knowledge or predict over the future. The main principle of MPC is to convert the control problem into optimization and solve it during the prediction horizon according to certain objective function [10].

MPC principle schematic is shown in Fig. 3. At sample *k*, the predicted output *y* of the plant model is compared with reference trend r with the effect of a measured disturbance *d* and the quadratic optimizer is used to generate a manipulated input *u* for the next sample *k+1*. The optimization function J of the simply formulated MPC is expressed in (7).

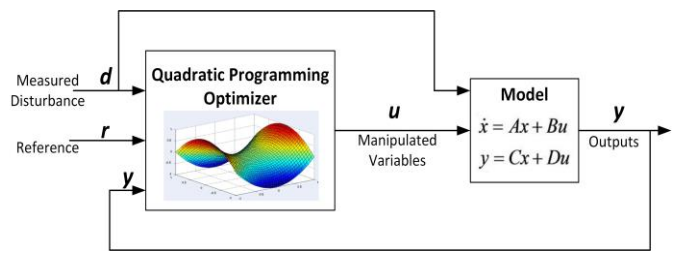

Fig. 3. Model predictive control principle.

$$J = Min\left(\sum_{i=1}^{N} w_{y,i}(r_i - y_i)^2 + \sum_{i=1}^{N} w_{u,i}\Delta u_i^2\right) \quad (7)$$

The difference between the predicted output y_i and the reference r_i is squared and weighted by factors $w_{y,i}$. In addition, if the change in manipulated input Δu_i is subjected to certain relative importance, it is weighted by a factor $w_{u,i}$.

IV. Energy Management Strategy Based Hierarchical Distributed MPC

The modern smart grids depend not only on renewable energy resources at the bulk generation level but also, at the consumer level which may be represented by micro-grids and prosumer distribution level. These recent advances make the power of the system transfer in two ways from bulk generation to prosumers and vice versa [12]-[13].

Due to the complexity of smart grids, distributing the management system might be justified. On the other hand, the computational generation dispatch optimization problem

becomes more complicated to be solved for the entire system. The great advent of market-based micro-grid systems, enforce the operator to design high securely control for the sub-systems that ensure integration and liberality policy at the same time. The hierarchical distributed MPC give the ability to divide the system into three management layers and each layer has its own controller/managers depending on the optimization problem size. A quick review of the main advantages of hierarchical distributed MPC over centralized and single layer distributed MPC is introduced in the next section.

A. *Hierarchical Distributed MPC*

The centralized MPC accesses all physical systems and gives the best performance, but needs high-speed communication, heavy computational burden and unreliable behavior besides some difficulties to scale it up for large scale systems. Moving to decimalized/distributed model predictive control in a single layer, it improves the robustness, reduces computation complexity and deals with restricted control action system. Nevertheless, the individual MPC agent can find the optimal solution for its sub-system but cannot find the best solution for the global supra-system.

The variability and uncertainty of the renewable energy resources increase in the downstream of the power system because the weather changes with the high ramping rate in the small areas. But, with larger balancing areas and investigating the variability and uncertainty of RES for the entire system, it supposed to be less ramping and steadily changes [2], [12]. According to this behavior of large-scale RES penetrations, the multi-time-frame hierarchical distributed MPC is the optimal solution for the smart grid management.

The proposed technique can provide a tradeoff between reducing computational complexity and high system performance with minimum time delay. The higher layer can obtain the guide rules for the lower layer. So, it can achieve the overall system optimality. Thanks to multi-time frame nature in the proposed technique, the management of the entire system has lower calculation frequency and the management gradually increases its frequency when going downstream to the zonal distribution level.

B. *Energy Management Strategy (EMS)*

The hierarchical distributed MPC is the best solution for dividing the tasks of the grid control into three main levels. The theory of the hierarchical distributed model predictive control is exploited to design the proposed energy management strategy. A schematic diagram in Fig. 4 shows the proposed implementation of the EMS. The managed system is taken for instance to illustrate the required procedures. The supra-system is assumed to be two areas systems and each area has three zones. The entire supra-system layer is managed by the supervisory manager. In the second layer, the coordination manager organizes the relation between areas in the supra-system. The control agents for each zone in the area are working to control/manage the lower system level.

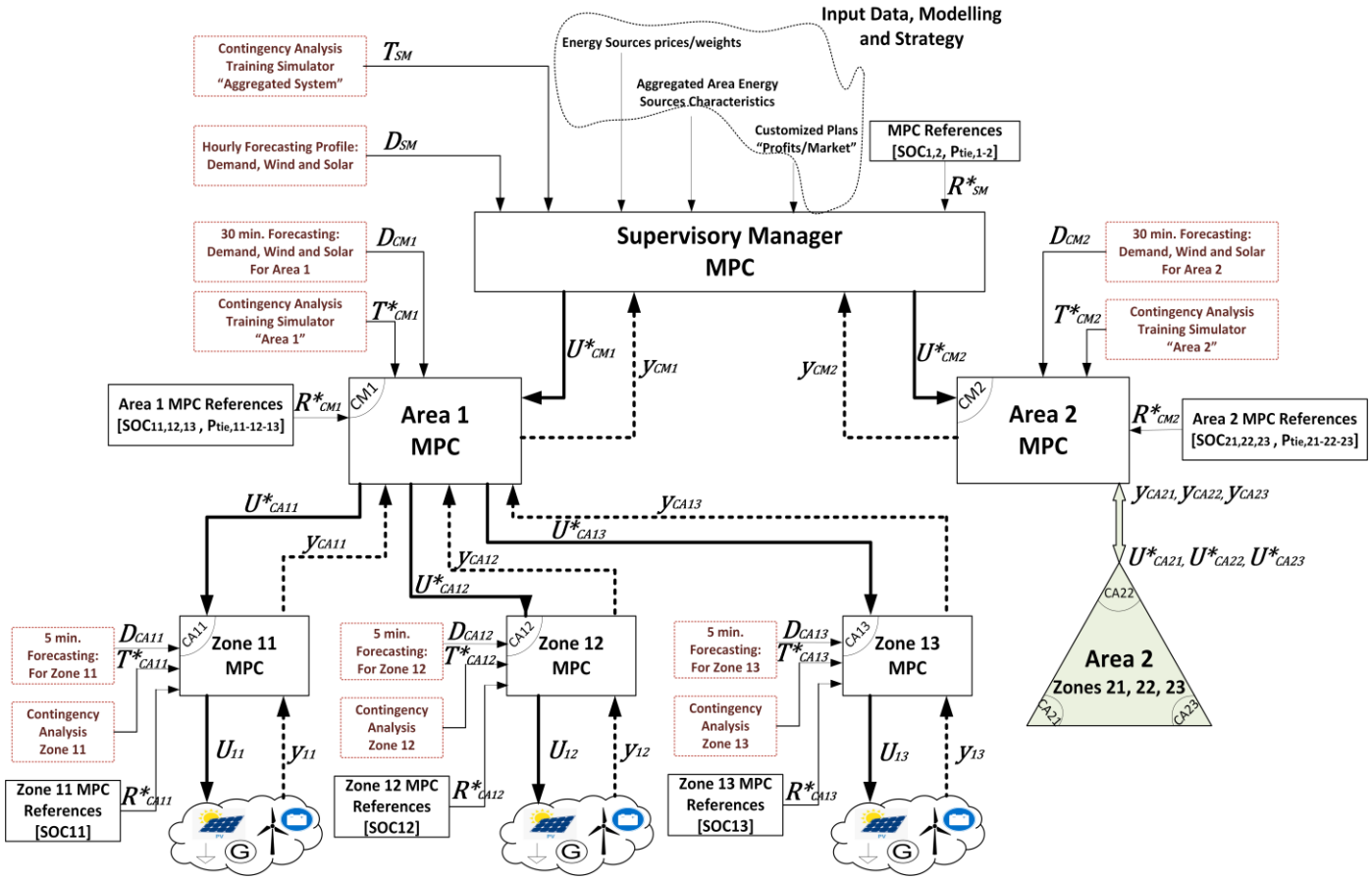

Fig. 4. Multi-vision EMS based hierarchical distributed model predictive control.

For all layers, MPC has an objective function that achieves the layer's own criteria. The standard objective function is the summation of four terms; each concerns a specific aspect of controller performance, as follows,

$$J = \sum_{i=0}^{p-1} \left\{ \begin{array}{l} [e_y^T(k+i)Qe_y(k+i)] + [e_u^T(k+i)R_u e_u(k+i)] \\ + [\Delta u^T(k+i)R_{\Delta u}\Delta u(k+i)] \end{array} \right\} \quad (8)$$

where p is the prediction horizon, k is the current control interval; $e_y(k+i)$ is the error between the reference and actual output for the ith prediction horizon and $e_u(k+i)$ is the error between target input and calculated manipulated input. To take the effect of ramping cost, $\Delta u(k+i)$ represents the change between a current and previous sample of the manipulated inputs. The weighting matrices for output, input, and change in inputs are Q, R_u and $R_{\Delta u}$, respectively. The following sub-sections elaborate the three layers in more details and sate the objective functions for each layer.

1) Supervisory Management Layer

In the first layer, the control/management strategy works to guide the overall management philosophy of the smart grid. The grid input data, parameters, and aggregated area energy sources characteristics are supplied to the MPC of *SM*. In addition, the energy sources prices and the main plan of management are set for MPC weights. Also, any user customized plans for profits/markets are defined to be the main intention of the supervisory manager.

The forecasting for the total grid demand and total wind and solar power infeed is composed as a disturbance D_{SM} for MPC_{SM}. The supervisory layer sees an entire grid demand and RES infeed so the variability and uncertainty of the load minus RES share are decreased because they compensate each other over the large grid balancing. Therefore, the forecasting for the first layer is supposed to be hourly sampling rate. Consequently, the MPC_{SM} solves the optimization problem over one-hour prediction and control horizon.

The reference signals R^*_{SM} of the MPC_{SM} are set in the MPC_{SM} to minimize the state of charge *SOC* in the grid and satisfy certain power transfer between the two areas tie-line $P_{tie,1\text{-}2}$. The supervisory manager solves an optimization problem to minimize the system cost, increase the profits and reliability. The optimization results work to modify the MPC_{SM} weights, constraints, and model via contingency analysis targets T_{SM}.

After calculating the optimal solution of the entire grid by the MPC_{SM}, it generates the targeted manipulated input signals U^*_{CM1} and U^*_{CM2} for the two areas. The manipulated signals are supposed to guide for the coordination managers' layer to achieve the holistic view of the entire grid operation for the one-hour horizon. The actual output of the two area manager's y_{CM1} and y_{CM2} are taken as feedbacks for the next hour optimization. The objective function in (8) is applied to the following values of the three terms to represent the supervisory management layer.

$$\begin{cases} e_{y,SM}(k+i) = R^*_{SM}(k+i+1\,|\,k) - y_{SM}(k+i+1\,|\,k) \\ e_{u,SM}(k+i) = T_{SM}(k+i\,|\,k) - u_{SM}(k+i\,|\,k) \\ e_{\Delta u,SM}(k+i) = u_{SM}(k+i\,|\,k) - u_{SM}(k+i-1\,|\,k) \end{cases} \quad (9)$$

where:

$R^*_{SM} = [SOC_1, SOC_2, P_{tie,1-2}]$, is the *SM* reference signals.

$y_{SM} = [y_{CM1}, y_{CM2}]$, is the actual outputs for the two areas.

$u_{SM} = [u^*_{CM1}, u^*_{CM2}]$, is the controlled inputs for the coordination layer for the two areas.

T_{SM} is the target manipulated inputs for customized plans or contingencies.

2) Coordination Management Layer

The second layer of power system area contains some zones in each area and it is restricted geographically and electrically by certain network topology with some types of generation/load/storage mix. The coordination layer is developed to manage the certain area in the power grid and organize the relationship between the supervisory management and control agents for each zone in the last layer. Due to the system under consideration is an area in the power system, the sampling of the control actions is suggested to be every 30 min. to cope the variability and uncertainty of the demand minus RES share.

The MPC for the two areas are set by references R^*_{CM1} and R^*_{CM2} and the 30 min load and RES share is fed as a disturbance D_{CM1} and D_{CM2}. In addition, the targets from contingency analysis are T^*_{CM1} and T^*_{CM2} and the input proposed targets from supervisory managers are U^*_{CM1} and U^*_{CM2}.

As the same way of the first layer, the second layer uses the actual measurements of the third control agent *CA* layer y_{CAab} as a feedback to optimize during the next 30 min. The coordination layer submits the calculated values of manipulated control inputs to the third layer as targets to satisfy it as a rule during the 30 min. Consequently, the targets are cast-off to guide the zones by using U^*_{CAab} The following equation illustrates the objective function terms according to Eq. (8) for a^{th} area and b^{th} zone.

$$\begin{cases} e_{y,CMa}(k+i) = R^*_{CMa}(k+i+1\,|\,k) - y_{CMa}(k+i+1\,|\,k) \\ e_{u,CMa}(k+i) = T^*_{CMa}(k+i\,|\,k) - u_{CMa}(k+i\,|\,k) \\ e_{\Delta u,CMa}(k+i) = u_{CMa}(k+i\,|\,k) - u_{CMa}(k+i-1\,|\,k) \end{cases} \quad (10)$$

Where:

$R^*_{CMa} = [SOC_{ab}, P_{tie,ab}]$, is the *CM* reference signals for a^{th} areas for each bth zone.

$y_{CMa} = [y_{CAab}]$, is the actual outputs for the ath areas for each bth zone.

$u_{CMa} = [u^*_{CAab}]$, is the controlled inputs for the control agent layer for the ath areas and at each bth zone.

$T_{CMa} = [T^*_{CMa}, U^*_{CMa}]$, is the targets of the manipulated inputs for customized plans or contingencies for a^{th} area.

3) Control Agents Layer

In the lower level, the distributed generation, micro-grids and prosumers are the main content of the zones. So, the balancing area becomes smaller and that make the variability and uncertainty larger. The real-time operation of the last layer is mandatory because the ramping of load minus RES share become aggressive. In this paper the sampling time is hypothetically set to be 5 min.

Finally, each zone-MPC has reference SOC_{ab} and its own 5-minute forecasting D_{CAab} besides targets T_{CAab} and U^*_{CAab}. The directly commands or set-points for the zone (plant) are u_{ab} and the actual output feedback for zone-MPC is y_{ab}. The following equation shows the objective function parts of the control agent MPC.

$$\begin{cases} e_{y,CAab}(k+i) = R^*_{CAab}(k+i+1\,|\,k) - y_{ab}(k+i+1\,|\,k) \\ e_{u,CAab}(k+i) = T^*_{CAab}(k+i\,|\,k) - u_{ab}(k+i\,|\,k) \\ e_{\Delta u,CAab}(k+i) = u_{ab}(k+i\,|\,k) - u_{ab}(k+i-1\,|\,k) \end{cases} \tag{11}$$

Where:

$R^*_{CAab} = [SOC_{ab}]$, *CA* reference signals for a^{th} areas at each bth zone.

$y_{CAab} = [y_{ab}]$, actual plant outputs for the ath areas at each bth zone.

$u_{CAab} = [u^*_{ab}]$, applied inputs for the control agent layer for the ath areas and at each bth zone.

$T_{CAab} = [T^*_{CAab}, U^*_{CAab}]$, targets of the manipulated inputs for customized plans or contingencies for a^{th} area at each bth zone.

V. EMS Communication Network

Figure 5 shows the communication network between layers, managers, and agents. The supervisory manger SM connected to each coordination managers *CM* by one message every 60 min. In the second layer, *CMs* are connected with their own *CAs* and between each *CM* by 30 min. Finally, the control agents in each zone *CA* are connected with each other every 5 min. and also with the plant by the same time frame of the third layer. One of the best advantages of *MPC* is its dependency on receding horizon sample. This nature becomes more helpful during temporarily communication failure while it depends on the previous sample for prediction process.

The communication delay is not a big challenge in our proposed system because of the nature of the hierarchal distributed *MPC* by increasing the communication frequency only in small area and for small optimization problem and vise-verse in the supervisory manager.

In hierarchal distributed control, each control agent can work self-sufficiently to accomplish its local objective, but cannot achieve the entire task on its individual. The agents can communicate and coordinate with each other, and can talk through a network in order to accomplish the complete task or objective.

If any sub-system is subjected to communication failure, the agent which is subjected to communication failure will use the remaining connection with another neighbor and connection with the upper layer to guess the required data. If the communication channel between the upper layer and any control agent fails, it uses the data from nearest neighbor to get the required information.

Many communication infrastructures might be used in the smart grid. The suggested communication channel is to use WiMAX or Cellular 4G to connect the SM with CMs and between CMs and CAs. In the other hand, it is supposed to use PLC or coaxial cables inside zones between CAs [14]-[15]. The multi-agent control system can be used to understand how independent processes organized and coordinated. The role of Multi-agent control systems is to communicate, control and take the decisions.

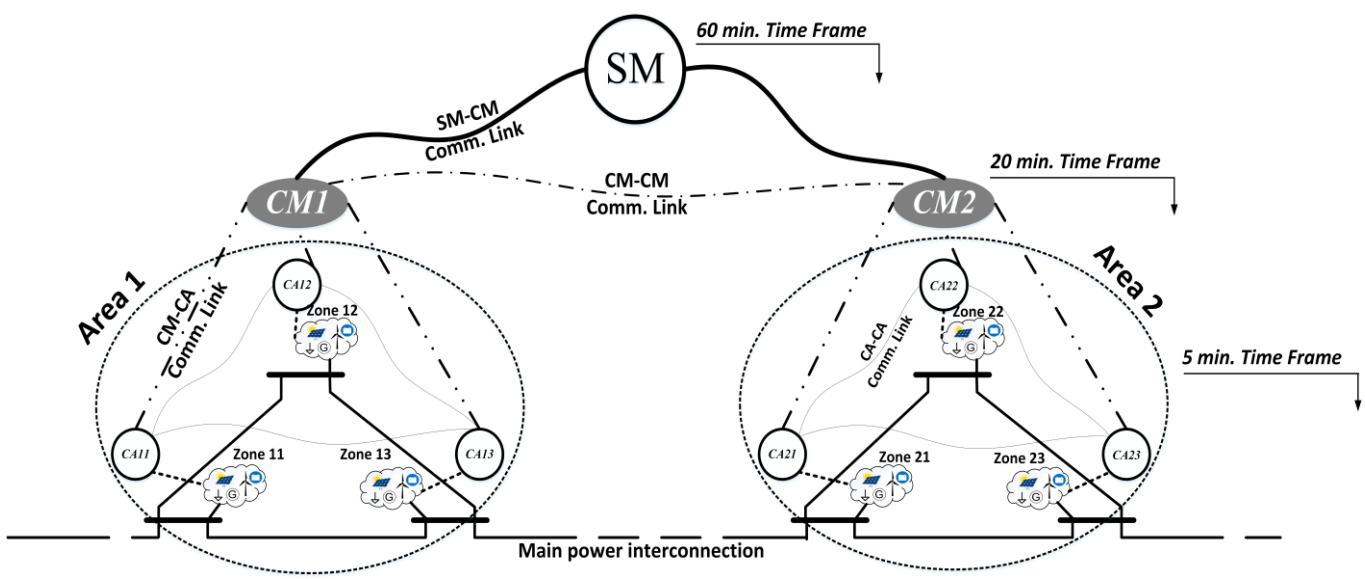

Fig. 5. A communication network for the proposed EMS.

VI. Conclusion

For real-time optimization and control, a hierarchical distributed model predictive control is constructed to design a multi-vision energy management system for smart grids. The proposed EMS overcomes the problems related to high level penetration of RES by hierarchically distributing the dispatching problem computational burden among three layers where each layer has its own perspective. The main feature of the hierarchical MPC is its cascaded control nature to coordinate between controllers. So, it does not only increase the EMS reliability but also reduce the complexity of calculation when it is compared with the centralized or single layer distributed control approaches. Also, the propose EMS provides a relaxed methodology for the grid operator to manage the entire system without complications of composite details in different grid levels while, the supervisory management can adjust the commanding for the lower layer managers and controllers.

References

[1] Y. Zong, D. Kullmann, A. Thavlov, O. Gehrke and H. W. Bindner, "Application of Model Predictive Control for Active Load Management in a Distributed Power System With High Wind Penetration," in IEEE Transactions on Smart Grid, vol. 3, no. 2, pp. 1055-1062, June 2012.

[2] Jonas, Philip A. "Predictive power dispatch for 100% renewable electricity scenarios using power nodes modeling framework." MS Thesis. Swiss Federal Institute of Technology, Zurich, Switzerland, 2011.

[3] J. Kabouris and F. D. Kanellos, "Impacts of Large-Scale Wind Penetration on Designing and Operation of Electric Power Systems," in IEEE Transactions on Sustainable Energy, vol. 1, no. 2, pp. 107-114, July 2010.

[4] S. Salinas, M. Li, P. Li and Y. Fu, "Dynamic Energy Management for the Smart Grid With Distributed Energy Resources," in IEEE Transactions on Smart Grid, vol. 4, no. 4, pp. 2139-2151, Dec. 2013.

[5] K. Heussen, S. Koch, A. Ulbig and G. Andersson, "Unified System-Level Modeling of Intermittent Renewable Energy Sources and Energy Storage for Power System Operation," in IEEE Systems Journal, vol. 6, no. 1, pp. 140-151, March 2012.

[6] Y. Xu, W. Zhang and W. Liu, "Distributed Dynamic Programming-Based Approach for Economic Dispatch in Smart Grids," in IEEE Transactions on Industrial Informatics, vol. 11, no. 1, pp. 166-175, Feb. 2015.

[7] J. J. Hargreaves and B. F. Hobbs, "Commitment and Dispatch With Uncertain Wind Generation by Dynamic Programming," in IEEE Transactions on Sustainable Energy, vol. 3, no. 4, pp. 724-734, Oct. 2012.

[8] W. Zhang, Y. Xu, W. Liu, C. Zang and H. Yu, "Distributed Online Optimal Energy Management for Smart Grids," in IEEE Transactions on Industrial Informatics, vol. 11, no. 3, pp. 717-727, June 2015.

[9] Li, Shaoyuan, and Yi Zheng. Distributed Model Predictive Control for Plant-wide Systems. John Wiley & Sons, 2016.

[10] Bemporad, Alberto, Manfred Morari, and N. Lawrence Ricker. "Model predictive control toolbox, user's guide." The Mathworks (2015).

[11] Svendsen, Harald G., and Ole Chr Spro. "PowerGAMA: A new simplified modelling approach for analyses of large interconnected power systems, applied to a 2030 Western Mediterranean case study." Journal of Renewable and Sustainable Energy 8, no. 5 (2016): 055501.

[12] Collective, Smart Energy. "An Introduction to the Universal Smart Energy Framework." Arnhem, The Netherlands 1 (2014).

[13] G. Q. Tang, "Smart grid management & visualization: Smart Power Management System," 2011 8th International Conference & Expo on Emerging Technologies for a Smarter World, New York, NY, 2011, pp. 1-6.

[14] Kuzlu, Murat, Manisa Pipattanasomporn, and Saifur Rahman. "Communication network requirements for major smart grid applications in HAN, NAN and WAN." Computer Networks 67 (2014): 74-88.

[15] Youssef, Tarek A., Ahmed T. Elsayed, and Osama A. Mohammed. "Data Distribution Service-Based Interoperability Framework for Smart Grid Testbed Infrastructure." Energies 9, no. 3 (2016): 150.