November 3, 2015

Reactive Power Compensation in the Oman /UAE 220 kV Interconnector

Omar H. Abdalla
Hisham Al-Riyami
Adil Al-Busaidi
Ahmed Al-Nadabi
Musabah Al-Siyabi, *Oman Electricity Transmisson Company*, et al.

Reactive Power Compensation in the Oman /UAE 220 kV Interconnector

O. H. Abdalla
Helwan University
(Egypt)

H. Al-Riyami
OETC
(Oman)

A. Al-Busaidi
OETC
(Oman)

A. Al-Nadabi
OETC
(Oman)

M. Al-Siyabi
OETC
(Oman)

Z. Al-Rawahi
OETC
(Oman)

R. Fronius
eDF
(France)

P. Miksa
eDF
(France)

SUMMARY

Oman and UAE are interconnected through the existing 220 kV, double-circuit transmission line between Al-Wasit (Mahdah) grid station in Oman and Al-Oha grid station in Abu Dhabi. The line has been already in service since the 14th of November 2011.

The objectives of this paper are to evaluate the size and type of reactive power compensation device to install in Al-Wasit and Al-Oha grid stations to control reactive power flow on the Oman/UAE interconnection. The following options have been analyzed:

- 100% reactive power control in Al-Wasit (Oman)
- 100% reactive power control in Al-Oha (UAE)
- 50% reactive power control in Al-Wasit (Oman) and 50% in Al-Oha (UAE)

Two types of compensation devices are presented: Mechanically Switched Compensator (MSC) and Static VAr Compensator (SVC).

Extensive modelling have been undertaken to represent the Oman/UAE interconnected system including neighboring systems. Oman power system and part of UAE power system (Al-Ain region where interconnection between Oman and UAE is driven) are represented by detailed models. A part of 400kV and 220kV network in Al-Ain region is modeled in detail to better represent the influence of UAE network on voltage profile in Oman. The rest of the UAE network as well as networks of Kuwait, Qatar, Bahrain and Saudi Arabia, are represented by equivalent models.

Load flow studies, sensitivity analysis and short-circuit calculations are performed by using the professional DIgSILENT Power Factory Software. Minimum short circuit values are calculated according to IEC60909 standard.

KEYWORDS: Oman/UAE 220kV Interconnector, Reactive Power Compensation, Mechanically Switched Compensator, Static VAr Compensator.

1. SYSTEM DESCRIPTION AND MODELLING

The Oman power system [1], [2] consists of three major power system grids as shown in Fig. 1:

1) Northern Grid: the Main Interconnected Transmission System (MITS)
2) Petroleum Development of Oman (PDO) Grid
3) Dhofar Grid

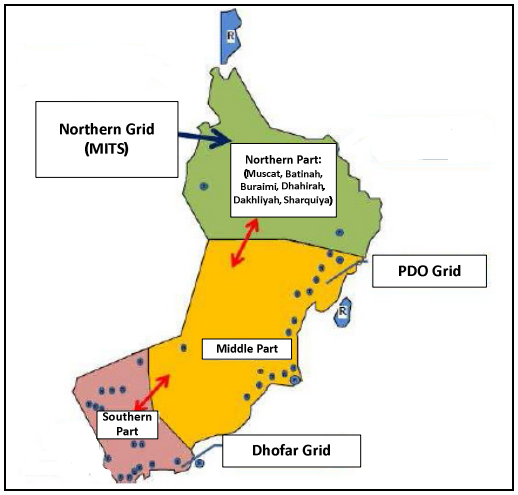

Fig.1: Oman power systems.

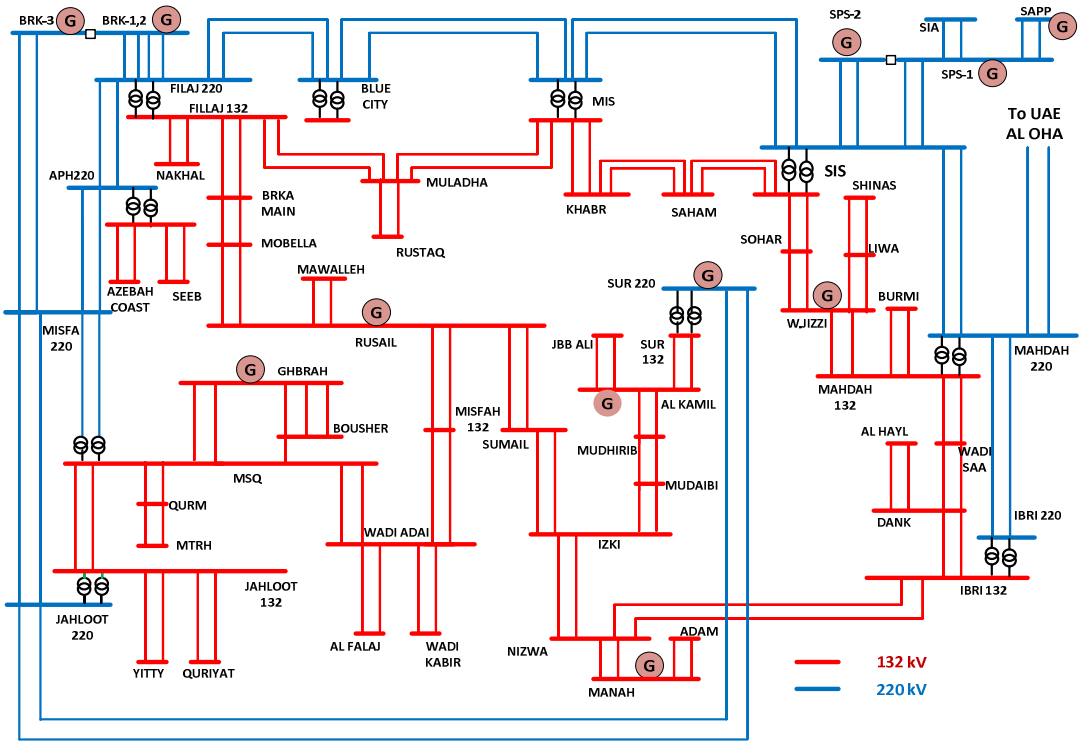

Fig. 2: Single line diagram of the MITS.

The northern and Dhofar grids are currently operated by the Oman Electricity Transmission Company (OETC). The main Load Dispatch Centre (LDC) of OETC is located in Muscat.

The existing MITS has two operating voltages, i.e. 220 kV and 132 kV as shown in Fig. 2. It extends across the whole northern part of Oman and interconnects bulk consumers and generators of electricity located in the Governorates of Muscat, Batinah South, Batinah North, Buriami, Dhahirah, Dakhliyah, Sharquiya North and Sharquiya South. Fig. 3 shows the Dhofar grid.

PDO and MITS grids are interconnected through Nahada-Nizwa 132 kV OHL. Also in the south, Dhofar system is at present connected to PDO system through 132 kV OHL from Thumrait grid station to Harwail grid station (PDO).

The Oman power system is interconnected at 220 kV from Mahdah (Al Wasit) grid station with the power system of UAE (Abu Dhabi Transco) [3], [4] which is a part of the GCC [5] grid that links the electricity power systems of Kuwait, Saudi Arabia, Bahrain, Qatar, UAE and Oman as shown in Fig. 4. Each country except Oman and part of UAE in (Al-Ain region where interconnection between Oman and UAE is driven) is represented by an equivalent model [6] as shown in Fig. 5.

A part of the 400 kV and 220 kV network in Al-Ain region is modeled to represent in a more realistic way the influence of the UAE network on the voltage profile in Oman.

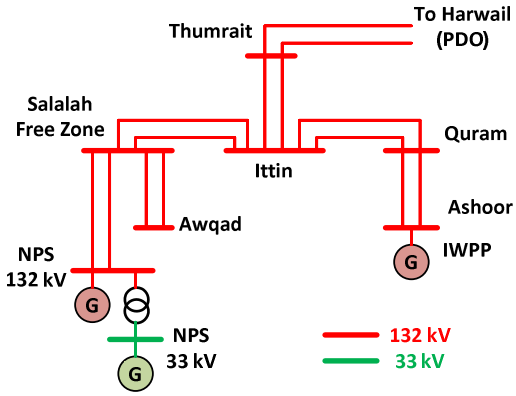

Fig. 3: Dhofar power system.

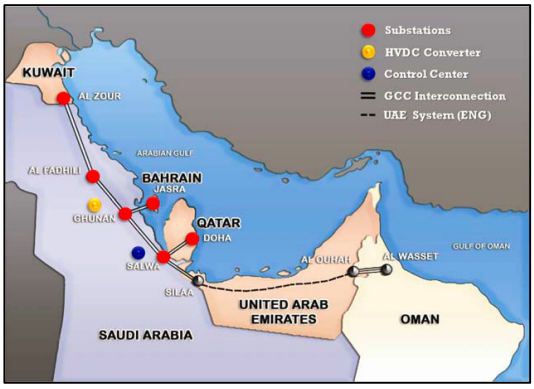

Fig. 4: GCCIA interconnected system.
Source: http://www.gccia.com.sa

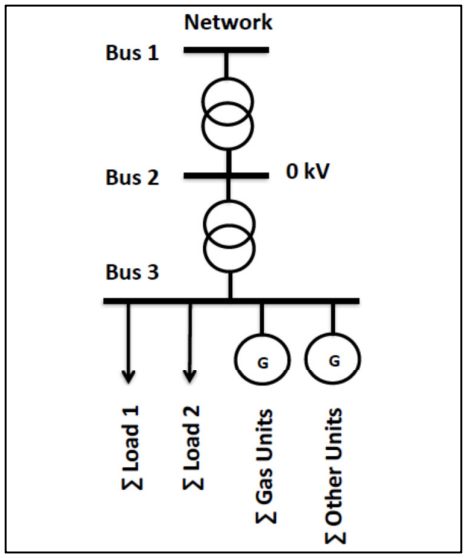

Fig. 5: Equivalent power system model.

The rest of the UAE network is represented by an equivalent model as well as networks of Kuwait, Qatar, Bahrain and Saudi Arabia, to model the GCCIA interconnection. This is done keeping the 400 kV network and representing all other voltage levels parts of the network through equivalent lines to one equivalent bus.

In the equivalent bus the total generation and load of the country is presented through a set of equivalent generators (according to type of production) and an equivalent load equal to whole system load (aggregated conserving the characteristics of the different types of load – industrial, residential, auxiliary - to better model voltage and frequency dependence as well as its dynamic behavior) [6], [7].

The complete system model of Oman, UAE and other GCC countries has been validated in [8].

2. SITE INVESTIGATIONS

Al-Wasit: In case of Al Wasit substation, installation of new additional equipment inside the existing substation fence is not an option. Additional land needs to be prepared, probably across the road (or the road needs to be moved) to the left of the 220 kV substation building, in order to enable further expansion of the substation. This can impose additional costs to implementation of reactive power compensation extension of substation which are not calculated in the estimates of this study. Another option is, to construct an annex of the substation to the north (again, the problematic issue is the existing road). Additionally there are plans to extend this substation with a 400kV system, and the most probable location for this extension is there. Additionally, the substation in Al-Wasit is GIS, and has limited options for extension, this can also add to the costs of implementing reactive power compensation equipment. The main conclusion is that the Al Wasit substation can be extended, but there might be additional costs. Also, these extensions have to be integrated in the global development strategy of the substation.

Al-Oha: Concerning Al-Oha substation, there is enough space available to install new equipment.

The main conclusion is that in both substations there is space available to install reactive power compensation, albeit some preparation work has to be done for Al-Wasit.

3. STATIC ANALYSES RESULTS

In this section static analyses are performed, using load flow, to evaluate the size of reactive power compensation devices in Al-Wasit and Al-Oha substation that will enable reactive power flow control on Oman/UAE interconnection.

Three arrangements have been analyzed:

- Option 1: 100% reactive power control in Al-Wasit (Oman)
- Option 2: 100% reactive power control in Al-Oha (UAE)
- Option 3: “50/50” reactive power control in Al-Wasit (Oman) and Al-Oha (UAE)

Each of these will have different reactive power control necessity, so for every case separate static analysis is performed in order to determine equipment size and substation arrangement.

According to the agreement between Oman and UAE [9], through summer months, reactive power flows on interconnection are penalized if they exceed 20 MVArh per hour no matter the direction, and side that happens. In order to keep the flows in this range, it has been decided to keep the maximum instantaneous reactive power flow within 2 × (±10) MVAr. This means that the results of this study are conservative as they do not take into account the flattening, and thus lowering, effect of an hourly integration of the simulated instantaneous values.

The biggest influence on the reactive power flow over the border from the Oman side is achieved by the engagement of the Wadi Al-Jizzi power plant. If it is not engaged at all (all units out of operation), voltages can be barely kept within the limits and reactive power flow on interconnection can go to (-34) MVAr {2×(-17) MVar} compared to the base case of (-18) MVAr {2×(-9) MVAr}. If they are engaged with full reactive power output (all units in operation and maximum voltage set 1.05 pu on all generators to get maximum reactive power production from each unit), reactive power flows change in the opposite direction to (+16) MVAr {2×(+8) MVAr} compared to the base case.

In UAE, all 400/220 kV transformers are in automatic voltage control mode with on-load tap changers [4]. This most probably causes shifts in reactive power flows on the Oman/UAE interconnection (transformers in Al-Ain region in Dahma, Sweihan, and Al-Ain West). As a consequence of tap changing of the Dahma transformers, it is possible to change reactive power flows on interconnection (+60) MVAr {2×(+30) MVAr}in direction of UAE, and (-40) MVAr {2×(-20 MVAr} in opposite direction, still keeping the voltages in the rest of the system within limits. If the full range of the transformer tap changers is used, these changes are even higher (+90) MVAr {2×(+45) MVAr} in direction of UAE and (-90) MVAr {2×(-45) MVAr} in the opposite direction. This means that transformers taps are on maximum and minimum positions. Transformers in Dahma are three 500 MVA units with 400±15×1%/230 kV/kV. Similar transformers are installed in Sweihan and Al-Ain West substations, and all these transformers have automatic tap changing mechanism installed to keep the voltage on 220 kV side as high as possible, as all generation units in that region are not running because of their high costs. Also in order to stabilize the voltage in this area, where there are only loads and no (running) generation, there are six SVC devices that influence reactive power flows, albeit in much less extent than the aforementioned transformers.

Most influential elements on reactive power flows are the one that are closest to Wadi Al-Jizzi. Also, from system snapshots from the LDC, the change of reactive power flow (it was going on one side, and later on opposite), was triggered by the engagement of Wadi Al-Jizzi power plant.

So most influential devices on the reactive power flow on the interconnection are:

- on UAE side the 400/220 kV transformers in Dahma
- on Oman side the engagement of power plant Wadi Jizzi

The agreement states that: "For the reactive energy the import meter of each party will be used for calculation". Reference metering points are taken as Al-Wasit for reactive power flows to Oman and Al-Oha for reactive power flows to UAE. It is important to notice that according to this agreement, reactive power flows on interconnection lines should not exceed the level of reactive power produced by the lines themselves.

The whole arrangement of controlling reactive power flow on border lines between OETC and Transco between ±20 MVArh/h is based on the fact to keep voltage levels in Al-Wasit and Al-Oha almost equal. Voltage difference in these two substations is causing reactive power flow in either direction (if the voltage is higher in Al-Wasit than in Al-Oha, then reactive power flows in direction to UAE).

4. REACTIVE POWER CONTROL IN AL-WASIT (OMAN) - OPTION 1

In order to dimension a switched shunt device to be placed in Al-Wasit, that will control reactive power flows on the 220 kV interconnection between Oman and UAE, marginal cases have been analyzed.

In case of flow in direction of Oman, voltage has to be increased in the UAE 220 kV network by changing tap ratio of Dahma transformers from 4 to -4. This is as far as the voltage can be increased in the 220 kV network. Usually these 400/220 kV transformers are set to keep voltage in 220 kV network around nominal values. Reactive power flow from UAE to Oman on the interconnection lines is {2×49 MVar (Fig. 6)} and it needs a capacitor of 210 MVAr in Al-Wasit in order to reduce the reactive power flow below 2x10 MVar.

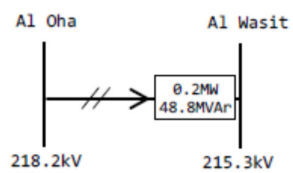

(a) Without switched shunt

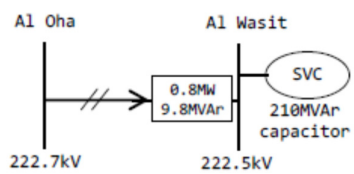

(b) With switched shunt

Fig. 6: Summer Peak regime – worst case reactive power flow on each line in direction of Oman.

In case of flow in direction of UAE, it is necessary to engage all units in Wadi All-Jizzi (active power output is divided between all units), and increase set voltage on machines to maximum value 1.05 pu [10], [11]. At the same time it is necessary to change tap ratio on transformers in Dahma from +4 to +15. This will maximize the reactive power flow in direction of UAE to 2×36 MVar, but it should be pointed out that all voltages in UAE 220 kV network are close to the lower limit. In this case it is necessary to install a reactor in Al-Wasit of 125 MVAr, to keep the reactive power flow in Al-Oha below 2×10 MVAr in direction of UAE. Fig. 7 shows the results.

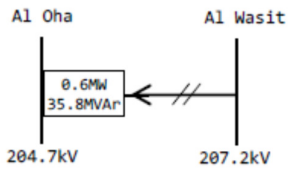

(a) Without switched shunt

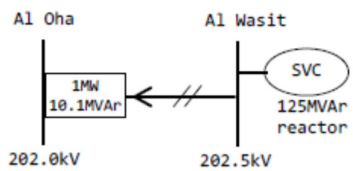

(b) With switched shunt

Fig. 7: Summer Peak regime – worst case reactive power flow on each line in direction of UAE.

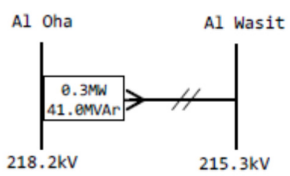

(a) Without switched shunt

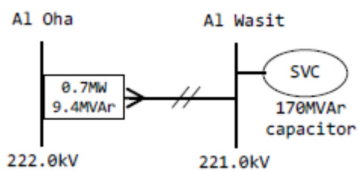

(b) With switched shunt

Maximum flow on each line in direction to Oman

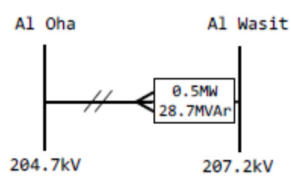

(c) Without switched shunt

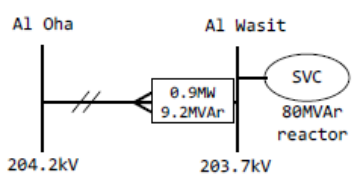

(d) With switched shunt

Maximum flow on each line in direction to UAE

Fig. 8: Summer Peak regime – worst case reactive power flow on each line if the measuring point is changed.

The simulations show also that the solution depends strongly on the measuring point. This means that the reactive power of the line is automatically added to the existing reactive flows, a fact that makes keeping the ±20 MVAr limit difficult.

Nevertheless, according to the existing rules, simulations in DIgSILENT [12] show that the installation of switched shunt in Al-Wasit with a reactive power range (+125/-210) MVAr (125 MVAr inductive / 210 MVAr capacitive) is sufficient to keep reactive power flow on interconnection lines in 2x±10 MVAr in Al-Oha or Al-Wasit respective to the measuring point specified in the agreement.

We must point out, that if the measuring points are shifted from import to export direction (which would give a more accurate view of the real transfer, the reactive power generated by lines themselves being part of reactive power import), the size of switched shunt is then only 80 MVAr inductive / 170 MVAr capacitive in Al-Wasit. The results are shown in Fig. 8.

5. REACTIVE POWER CONTROL IN AL-OHA (UAE) - OPTION 2

In order to dimension a switched shunt device to be placed in Al-Oha, that will control reactive power flows on the 220 kV interconnection between Oman and UAE, marginal cases have been analyzed.

In case of a power flow in direction of Oman, voltage has to be increased in the UAE 220 kV network by changing tap ratio of Dahma transformers from 4 to -4. This is as far as the voltages can be increased in 220 kV network. Usually these 400/220 kV transformers are set to keep voltage in 220 kV network around nominal values. Reactive power flow from UAE to Oman on the interconnection lines is 2x49 MVar (Fig. 9) and it needs a reactor of 230 MVAr in Al-Oha in order to reduce the reactive power flow below.

In case of flow in direction of UAE, it is necessary to engage all units in Wadi All-Jizzi (active power output is divided between all units), and increase set voltage on machines to maximum value 1.05 pu (Fig. 10). At the same time it is necessary to change tap ration on transformers in Dahma from +4 to +15. This will maximize the reactive power flow in direction of UAE to 2 × 36 MVAr, but it should be pointed out that all voltages in UAE 220 kV network are close to the lower limit. In this case it is necessary to install a capacitor in Al-Oha of 150 MVar, to keep the reactive power flow in Al-Oha below 2 x 10 MVAr in direction of UAE.

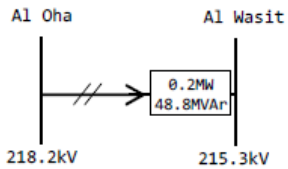

(a) Without switched shunt

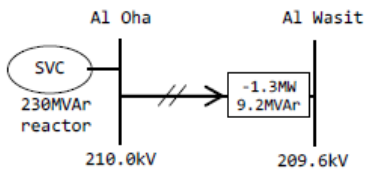

(b) With switched shunt

Fig. 9: Summer Peak regime – worst case reactive power flow on each line in direction of Oman (compensation installed in Al Oha).

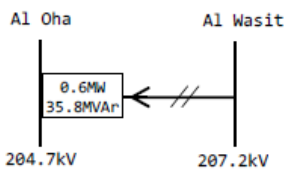

(a) Without switched shunt

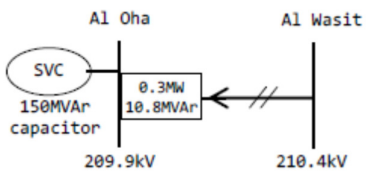

(b) With switched shunt

Fig. 10: Summer Peak regime: worst case reactive power flow on each line in direction of UAE (compensation installed in Al-Oha)

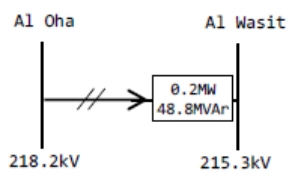

(a) Without switched shunt

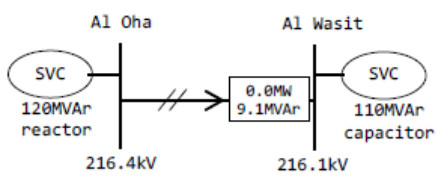

(b) With switched shunt

Fig. 11: Summer Peak regime – worst case reactive power flow on each line in direction of Oman (compensation installed in Al-Wasit and Al-Oha).

According to the existing rules, simulations in DIgSILENT show that the installation of a switched shunt in Al-Oha with a reactive power range +230 / -150 MVAr (230 MVAr inductive/150 MVAr capacitive) is sufficient to keep reactive power flow on interconnection lines in the range 2 × (±10MVAr) in Al-Oha or Al-Wasit respective to the measuring point specified in the agreement. These values are higher than for Al-Wasit substation, and the reason is that Al-Wasit is a "stronger" substation as concerns its voltage stability, which is closely linked to its short circuit values.

6. REACTIVE POWER CONTROL IN AL-WASIT (OMAN) AND AL-OHA (UAE) - OPTION 3

In order to dimension a switched shunt device to be placed in both Al-Wasit and Al-Oha, that will control reactive power flows on the 220 kV interconnection between Oman and UAE, marginal cases have been analyzed as in previous two occasions.

In order to keep the reactive power flow between Al Wasit and Al Oha within ± 2 × 10 MVAr voltages in these two substations have to be almost equal. The other essential point is that a detailed control process that enables equal participation of both sides has to be put in place. Any other approach will mean that one side is participating more than other.

In case of a power flow in direction of Oman, voltage has to be increased in the UAE 220 kV network by changing tap ratio of Dahma transformers from 4 to -4. Reactive power flow from UAE to Oman on interconnection lines is 2 × 49 MVAr (Fig. 11) but more importantly, voltage in Al-Oha is 218 kV and in Al-Wasit 215 kV. In order to reduce this reactive power flow, the most optimal way is to increase voltage in Al-Wasit and to reduce it in Al-Oha by installing a capacitor of 110 MVar in Al-Wasit, and a reactor in Al+Oha of 120 MVAr.

In case of a flow in direction of UAE, it is necessary to engage all units in Wadi All-Jizzi (active power output is the same, only all units are switched on), and increase set voltage on machines to maximum value 1.05 pu (Fig. 12). At the same time it is necessary to change tap ration on transformers in Dahma from +4 to +15. This will maximize the reactive power flow in direction of UAE to 2 × 36 MVar, but it should be pointed out that all voltages in UAE 220 kV network are close to their lower limit.

In this case the most optimal way to reduce reactive power flow is to increase voltage in Al-Oha by installing a capacitor of 70 MVar, and a reactor in Al-Wasit of 70 MVar.

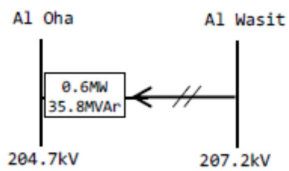

(a) Without switched shunt

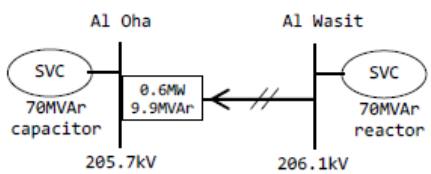

(b) With switched shunt

Fig. 12: Summer Peak regime – worst case reactive power flow on each line in direction of UAE (compensation installed in Al-Wasit and Al-Oha)

The devices to be installed are: switched shunts in Al-Wasit with a reactive power range (+70/-110) MVAr (70 MVAr inductive/ 110 MVAr capacitive) and in Al-Oha (+120/-70) MVAr (120 MVAr inductive/ 70 MVAr capacitive). These devices are sufficient to keep reactive power flows on the interconnection lines in the limits of {2 × (±10) MVAr in Al-Oha or Al-Wasit at the measuring points specified in the agreement.

7. MINIMUM SHORT-CIRCUIT CURRENTS

Minimum short circuit values are calculated according to IEC60909 Standard [13], taking into consideration adequate voltage correction factors c and adequate minimum power plant engagement (winter minimum regime).

Table I shows the calculated values for minimal short circuits. These results are taking into consideration full topology.

Table I: Minimum short circuit currents.

Bus Name	CB Capacity (kA)	Factor c	Fault Current (kA)	
			3-Phase	1-Phase
Al-Wasit 220 kV	40	0.9	14.3	12.6
Al-Wasit 132 kV	31.5	0.9	14.4	15.3
Al-Oha 220 kV	40	0.9	13.8	11.0

8. SWITCHED SHUNT SIZE EVALUATION

Two sub-options depending on the type of switches used exist:

1) Mechanically switched shunt: Mechanically Switched Capacitor (MSC) or Mechanically Switched Reactor (MSR).
2) Static VAr Compensator (SVC) in which thyristors are used as switches.

Mechanically Switched Capacitors (MSCs) and Mechanically Switched Reactors (MCRs) are a simple and low-speed solution for voltage control. The average response times ranges from 100 to 150 ms. Fig. 13 shows a typical schematic diagram of a mechanically switched shunt.

SVCs can provide a continuously variable reactive power range. Fig. 14 shows a typical schematic diagram of SVC system connection. The reactive power is changed by switching on three-phase capacitor and reactor banks connected to the secondary side of the transformer. Each capacitor bank is switched on and off by thyristors (TSC). Reactors can be either switched (TSR) or controlled (TCR).

Both devices will have to be automatically controlled. Because of the costs, MSC are more favorable than a SVC, but prices of SVC equipment are going down compared to standard switching equipment. Also, MSC have disadvantages in operating and maintenance costs, because any mechanical equipment has a limited number of switching, and after a certain number it has to be replaced or overhauled. MSC has an important disadvantage because control is in steps, so the step-size has to be selected carefully to fulfill system standards and requirements. Smaller steps imply a finer control, but also mean more switches and more space in a substation to accommodate this device.

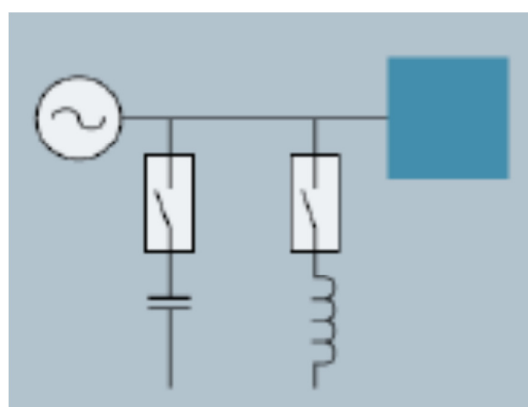

Fig. 13: Typical schematic of a mechanically switched shunt.

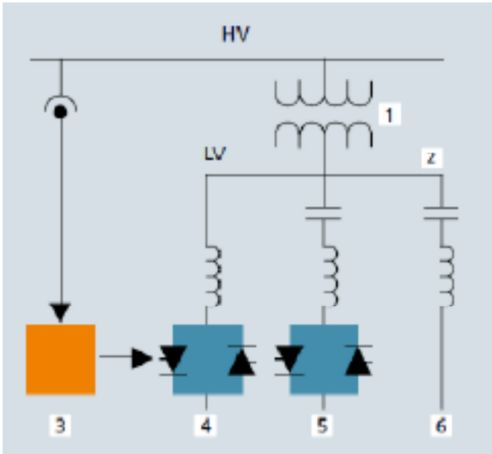

Fig. 14: Typical schematic diagram of SVC system connection.
(1) Sep down transformer
(2) LV bus bar
(3) Control circuit
(4) Thyristor Controlled Reactor (TCR)
(5) Thyristor Switched Capacitor (TSC)
(6) Fixed filter circuit

SVCs on the other hand, have much faster switching and an unlimited number of switching operations, lower maintenance costs and much more additional regulating options. But they are more expensive, and their usage is only justified if fast acting voltage and reactive power control is necessary to fulfill security standards and system requirements. Another disadvantage of these systems, besides their price, is that a step down transformer has to be installed in all cases.

Oman Grid Code [10] allows maximum voltage change limits of ±10% for 220 kV and 132 kV. So switching actions should not take the voltage out of these limits when single tap change is done.

For these analyses the following paragraph from the Grid Code could be used: "1% of the voltage level for step changes which may occur repetitively. Any large voltage excursions other than step changes may be allowed up to a level of 3% provided that this does not constitute a risk to the transmission system or to the system of any user."

Taking this in consideration, it can be concluded that maximum value for capacitor or reactor banks switched on or off at the same time is then calculated as:

$$\max\ C = \Delta U_{max} \cdot SCL_{min} \quad (1)$$

where
max C = maximum value for capacitor bank in MVAr
ΔU_{max} = maximum allowed voltage change in p.u.
SCL_{min}= minimum short circuit level at the concerned bus in MVA

As presented in detail in Section 4, installation of switched shunt in Al-Wasit with reactive power range +125/-210 MVAr (i.e. 125 MVAr inductive / 210 MVAr capacitive) is sufficient to keep reactive power flow on interconnection lines within 2×(±10) MVAr in Al-Oha or Al-Wasit respective to the measuring point specified in the agreement.

For Al-Wasit 220 kV substation, the minimum short circuit level is 14.3 kA (or 5458 MVA), and the maximum compensation step size is:

$$\max\ C\ (\mathrm{Al-Wasit}) = 0.01\times5458 = 54.58\ \mathrm{MVAr}$$

For Al-Oha 220 kV substation, the minimum short circuit level is 13.8 kA (or 5270 MVA), and the maximum compensation step size is:

$$\max\ C\ (\mathrm{Al-Oha}) = 0.01\times5270 = 52.70\ \mathrm{MVAr}$$

The steps which will have to be chosen for a MSC will be lower than the values calculated.

Sensitivity analyses show that 25 MVAr steps will enable 5-10 MVAr flow change (or 0.2-0.4 MVAr/MVAr) on the interconnection lines between Oman and UAE, and 2 kV/MVAr. The lower value stands for more extreme network conditions (peak regime and maximum reactive power flows on the lines) while 10 MVAr stands for less demanding operational regimes.

Since the main purpose of this switched shunt is control of power flows on lines, adequate automatic devices should be selected accordingly (measuring equipment and operating logic).

The last criterion to select between MSC and SVC is the frequency of change of the compensation requirement. This study has to be done taking into account 15 minutes metering data over a statistically relevant duration.

The compensation devices should have standard values (for MSC multiples of the step size) in order to keep the costs as low as possible. For Al-Wasit substation (Option 1) the recommended device has the size of +100/-200 MVAr (100 MVAr inductive / 200 MVAr capacitive) and according to the technique used a maximum step size of 25 MVAr, the selection is (4×25 MVAr reactors, and 8×25 MVAr capacitors). For Al-Oha substation (Option 2) the recommended device has the size of +225/-150 MVAr (225 MVAr inductive/150MVAr capacitive) and according to the technique used a maximum step size of 25 MVAr (9×25MVAr reactors, and 6×25 MVAr capacitors).

This device should be in double loop control mode. Primary loop is to control reactive power flow on 220 kV line Al-Wasit / Al-Oha. Secondary control loop is to control voltage in 220 kV bus Al-Wasit or Al-Oha. This is done to prevent voltages falling below minimum value when in inductive mode or over maximum value when operating in capacitive mode [14].

For Al-Wasit and Al-Oha combined option (Option 3), the recommended device has the size of: at Al-Wasit +75 / -100 MVAr (75 MVAr inductive / 100 MVAr capacitive) with a maximum step size of 25 MVAr (3×25 MVAr reactors, and 4×25 MVAr capacitors) and at Al-Oha +125/-75 MVAr (125 MVAr inductive / 75 MVAr capacitive) in maximum 25 MVAr steps (5×25 MVAr reactors, and 3×25 MVAr capacitors).

Additionally, in case when reactive power control is done in both substations, it is necessary to establish a telecommunication channel between the two substations, so the two devices synchronize their operation and avoid mutual opposite triggering (one device is reducing reactive power flow, and other increasing). This would be a third loop to be added to the control logic on both sides.

9. COST ESTIMATION

Tables II and III summarize comparison of costs for various compensators options including type and place of installation. The total cost of each option includes cost of electrical equipment, cost of civil works, cost erection, cost of testing, cost of commissioning and cost of spares [14].

Table II: Costs of MSCs.

Switchgear Type	Place		
	100% Al-Wasit	100% Al-Oha	50%/50% Wasit/Oha
AIS	M$ 13.8	M$ 15.3	M$ 23.8
GIS	M$ 31.9	M$ 33.7	M$ 57.6

Table III: Costs of SVCs.

Switchgear Type	Place		
	100% Al-Wasit	100% Al-Oha	50%/50% Wasit/Oha
AIS	M$ 18.8	M$ 21.1	M$ 33.8
GIS	M$ 37.7	M$ 40.0	M$ 69.9

Table II shows the prices for mechanically switched compensators (MSC) and Table III shows the prices of the SVCs. Cost analysis has shown that none of the aforementioned investments can be compensated by the contractual fees for a non-respect of the 2×10 MVArh/h limit for reactive power transport.

10. CONCLUSIONS

According to the rules and regulations on the Oman/UAE border, the reactive power flow must be kept within close limits. In order to achieve an acceptable reactive power flow, massive compensation means would have to be installed at the Al-Wasit substations. Nevertheless, a change in the contractual measuring point could reduce the size of the necessary compensation devices.

The option in which Al-Oha is selected as point for compensation requires installation of more reactive power equipment, which is a consequence of Al-Wasit being an electrically "stronger" bus than Al-Oha. Analyses of costs show that the option 3 in which compensation is implemented on both sides of the interconnection is almost double in costs, compared to option on one side only. This is a consequence of the fact that costs required in both substations are almost fixed (switching gear, transformers, building), and only compensation equipment costs are relatively smaller. Also, it should be pointed out that although a compensation device installed on the Oman side of the border can keep values within the imposed limits, voltage levels in this substation come close to lower limits which lead to increased power losses.

Finally, the selection criterion between MSC and SVC is the frequency of change of the compensation requirement. This requires a study taking into account 15 minutes metering data over a statistically relevant duration.

A substantial point is that none of the aforementioned investments can be compensated by the contractual fees for a non-respect of the 2×10 MVArh/h limit for reactive power transport.

We suggest that this subject should be addressed in the context of the planned new 400 kV interconnection between the two countries [15], because the installation of 400/220 kV transformers with appropriate automatic tap changing control will make the compensation devices obsolete.

ACKNOWLEDGEMENT

The authors are grateful to Eng. Ali Al-Hadabi, CEO of Oman Electricity Transmission Company for encourage performing this study. The authors are also grateful to Transco Abu Dhabi for providing transmission data and useful discussions.

REFERENCES

[1] OETC: The Annual Five-Year Transmission System Capability Statement (2015-2019), http://www.omangrid.com

[2] Al-Busaidi, and I. French: Modeling of petroleum development Oman (PDO) and Oman electricity transmission company (OETC) power systems for automatic generation control studies, Proc. Int. Conf. on Communication, Computer, and Power, ICCCP'09, Sultan Qaboos University, Muscat, Oman, 15-18 February, 2009. *IEEE Xplore*

[3] O. H. Abdalla, R. Al-Badwawi, H. Al-Hadi, H. Al-Riyami, A. Al-Nadabi, Karim Karoui, and Ariadne Szekut: "Interconnection of Oman and UAE Electric Power Systems," Proceedings of the GCC Power 2011 Conference & Exhibition, Kuwait 20– 23, Paper No. A103, November 2011.

[4] Transco Abu Dhabi, "2014 Seven Year Electricity Planning Statement (2014-2020)", November 2014. http://www.transco.ae

[5] Al-Ebrahim, N. Al-Shahrani, M. Al-Shaikh, K. Karoui, D. Zenner, and P. Michal, "GCC Interconnection Grid: Operational Studies for the GCC Interconnection with United Arab Emirates (UAE)," Cigre 2012, Paris, Paper No. C2-209, 2012.

[6] M. Gavrilas, O. Ivanov, G. Gavrilas "REI Equivalent Design for Electric Power Systems with Genetic Algorithms", WSEAS Trans. on Circuits & Systems Issue 10, Volume 7, October 2008.

[7] F. Milano, and K. Srivastava, "Dynamic REI equivalents for short circuit and transient stability analyses", Electric Power Systems Research 79, pp. 878–887, 2009.

[8] OETC and eDF, "Reactive Power Compensation Requirements for OETC with 400 kV System 2016", June 2013.

[9] Oman Power & Water Procurement Company, http://www.omanpwp.com.om

[10] OETC, "The Grid Code – version 2.0", April 2010. http:/www.omangrid.com

[11] Transco Abu Dhabi, "The Electricity Transmission Code", January 2012. http://www.transco.ae

[12] "DIgSILENT Power Factory 14.1", Power Factory, April 2012. http://www.digsilent.de

[13] IEC, "IEC 60909 International Standard"; First edition, July 2001.

[14] OETC and eDF, "Reactive Power Compensation in the Oman / UAE 220 kV Interconnector", November 2013.

[15] O. H. Abdalla, R. Al-Badwawi, H. Al-Hadi, and H. Al-Riyami: "Performance of Oman Transmission System with the 400 kV Gulf Cooperation Council Electricity Interconnection", Proceedings of the 2011 IEEE GCC Conference, Dubai, United Arab Emirates, 19-22 February 2011. *IEEE Xplore*