June 26, 1995

A Unified Topological Approach to Electromagnetic Environmental Effects Protection

George H Baker, *James Madison University*
J. Philip Castillo
Edward F. Vance

A UNIFIED TOPOLOGICAL APPROACH TO ELECTROMAGNETIC ENVIRONMENTAL EFFECTS (E^3) PROTECTION

2nd International Symposium on Electromagnetic Compatibility (EMC) And Electromagnetic Ecology (EME)

St. Petersburg, Russia

EMP and EMC for Civil Systems Session

GEORGE H. BAKER, DNA
J. PHILIP CASTILLO, LOGICON RDA
EDWARD F. VANCE, SRI INTERNATIONAL

26-30 JUNE 1995

OUTLINE

- Motivating factors
- Examples of EM effects
- Dominant EM effects concept
- Technical basis
- Generalized approach
- Summary

MOTIVATING FACTORS

- Reduction of costs and increased value of system acquisition
- Systems with multiple EM effects requirements
- Growing dependence on electronics of increasing susceptibility
- Consolidation of EM design / protection standards
- Consolidation of test requirements and test facilities
- Development of consistent commercial and military EM standards
- Potential for considerable cost savings

EXAMPLES OF EM EFFECTS

- Lightning
- ESD
- EMC / EMI
- ECM / ECCM
- EMR (O / H)
- RADHAZ, HERO
- TEMPEST
- HPM, UWB
- EMP
  - HEMP
  - SREMP
  - SGEMP / IEMP
  - DEMP

EXAMPLES OF EM EFFECTS: HPM

- Typical HPM parameters
  - Frequency range: 0.3 to 10 GHz / 100 GHz
  - Pulse width: nanoseconds to microseconds
  - Peak power: 0.1 to 10 GW
  - Repetition rate: 10 to 100 Hz
- Impacts wide spectrum of systems

EXAMPLES OF EM EFFECTS: NUCLEAR EMP

- Produced by high altitude (> 40 km) burst
- Time-domain peak electric fields of 50 kV/m
- Frequency components to 100 MHz
- Affects wide spectrum of systems
- Wide area coverage

DOMINANT EM EFFECTS CONCEPT

Expected cost of failure = expected failure rate x cost per failure

- Define the EM effects with the greatest expected failure cost as the Dominant EM effects
- Goal is to reduce expected cost to acceptable level
- The acceptable cost level threshold may occur when Δ cost of protection $\approx$ Δ cost of failure without protection

TECHNICAL BASIS

- Define applicable EM effects and determine those that dominate
- A single generalized barrier can moderate the Dominant EM effects
  - Barrier may be shaped or distributed as required
  - Penetration protection provided
  - Validation testing requirements are a function of barrier design and acceptable risk
- Difficulties
  - Very wide EM effects amplitude and frequency coverage
  - Large variation of equipment technology, location, and function
  - EM effects sources may be located externally or internally

TECHNICAL BASIS

TECHNICAL CONSIDERATIONS

- Designs exist that employ shielding and TPDs for protection from individual threat environments
- Therefore, it is conceptually feasible to combine them into a single integrated protection design
- The challenge is to reduce redundancy in order to reduce costs through
  - Selecting the Dominant EM effects
  - Common design
  - Common validation testing
  - Maintenance
  - Balancing the cost of implementing protection with the cost of failure

TECHNICAL BASIS
STRESS AND STRENGTH

A system may be viewed as being adequately protected if

System EM effects strength > system EM effects stress + margin

- System EM effects strength determined by critical subsystem suceptibilities
- System EM effects stress based on defined Dominant EM effects
- The selected margin depends on system function criticality and failure cost. Quantitatively, it also depends on stress and strength uncertainties

TECHNICAL BASIS

PENETRATING STRESS VS. FREQUENCY

	Frequencies		
Penetration Category	Low kHz to MHz	Intermediate MHz to GHz	High GHz and Up
Conductive (TEM)	Most important at lower frequencies Varies as $1/\sqrt{f}$ →		
Aperture	Most important at higher frequencies Increases with f		
Deliberate Antenna	In-band and out-of-band dependence		
Diffusion	Varies as $\exp(-\sqrt{f})$ → Usually small to negligible for good conductors		

TECHNICAL BASIS

OPTIONS FOR ALLOWABLE RESIDUAL LEVELS

Decreasing risk ↓

Increasing residual stress ↑

- Transient stress burnout
- Rated power (manufacturer-specified)
- Operating signal level
- Normal operating noise level

TECHNICAL BASIS

SYSTEM BARRIER TOPOLOGY

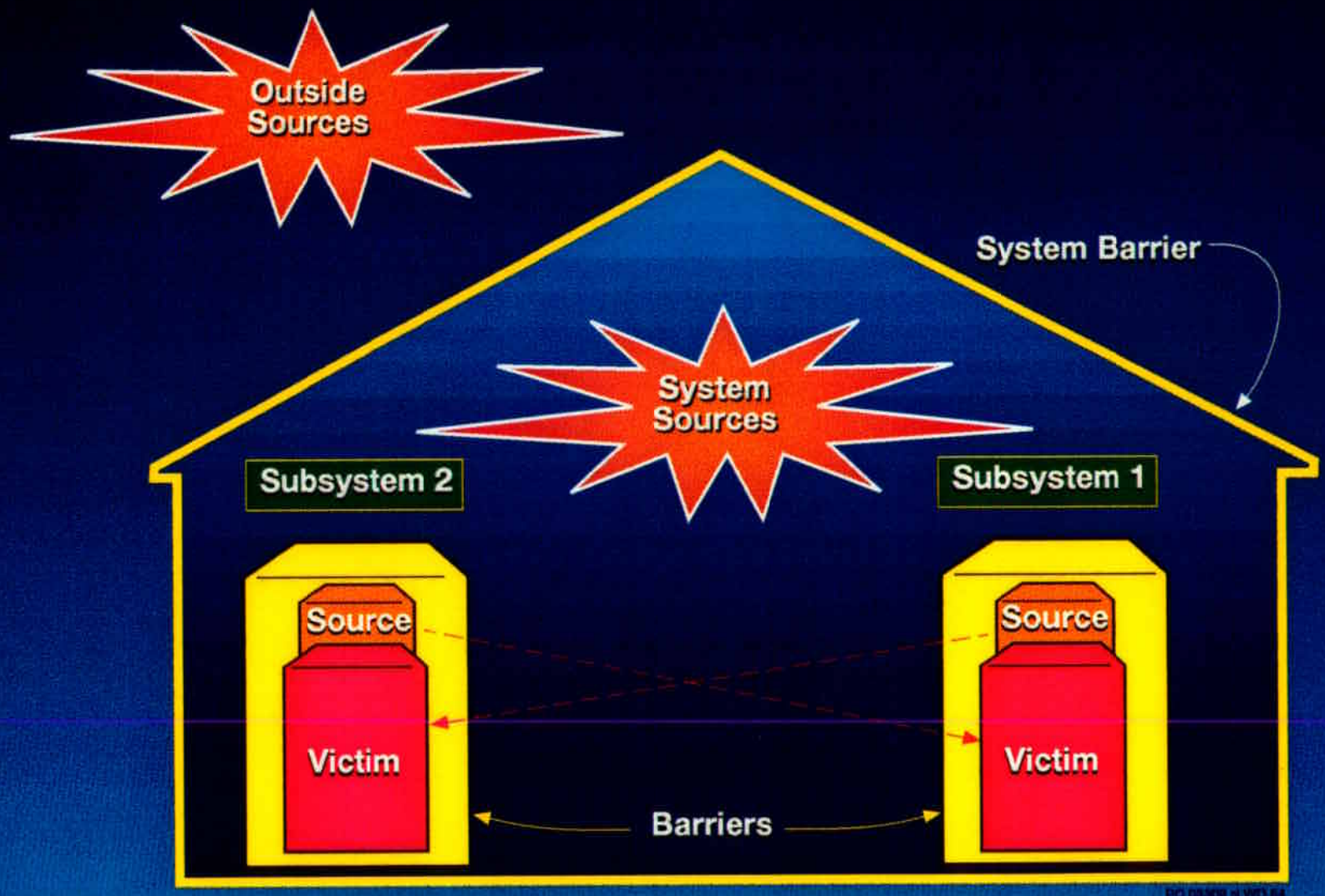

TECHNICAL BASIS

SYSTEM VOLUME AND SURFACE TOPOLOGY (GENERAL)

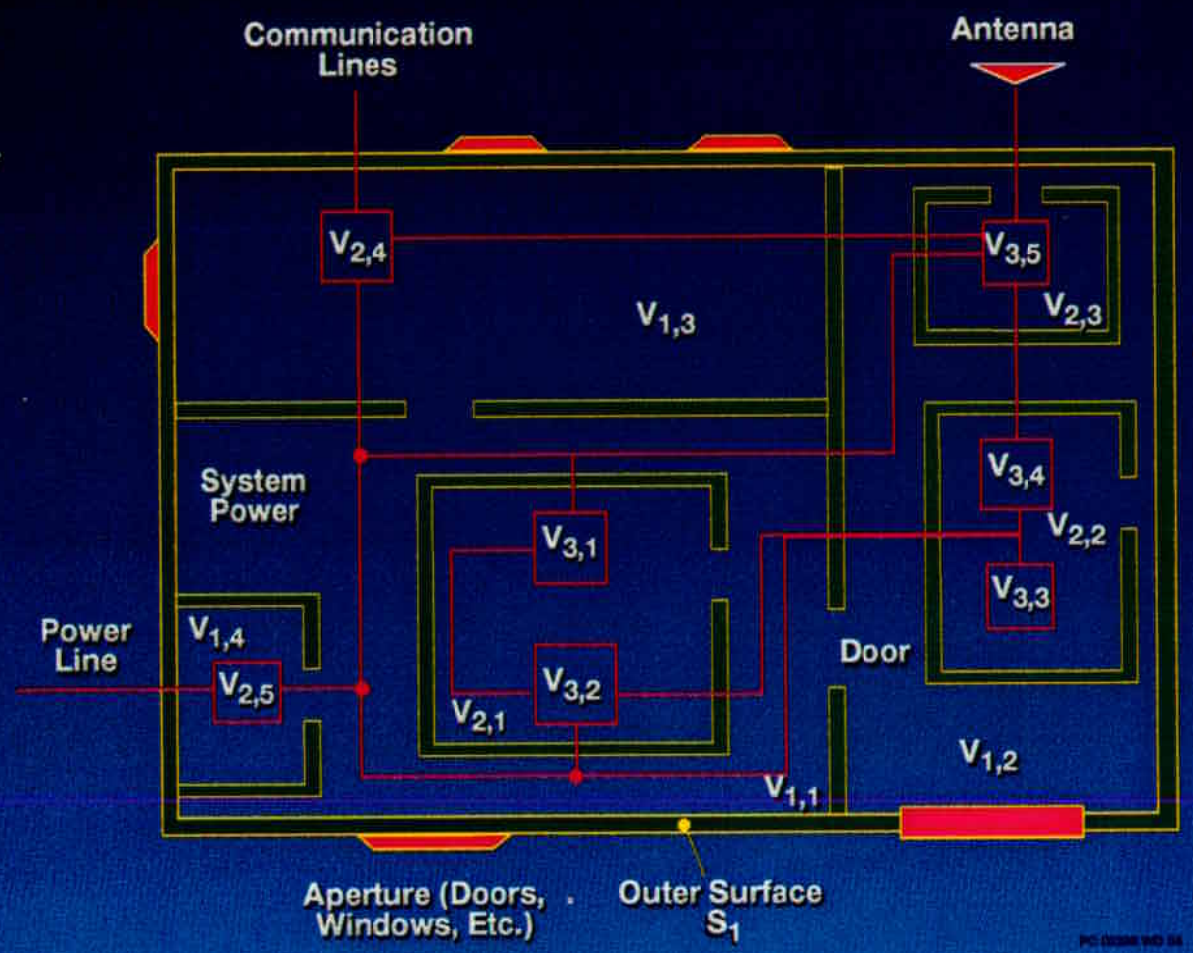

- Topological levels of protection
  - System Level
  - Subsystem Level
  - Box Level
  - Component Level

MITIGATION TECHNIQUES
SYSTEM LEVEL PROTECTION WITH SUBSHIELDS

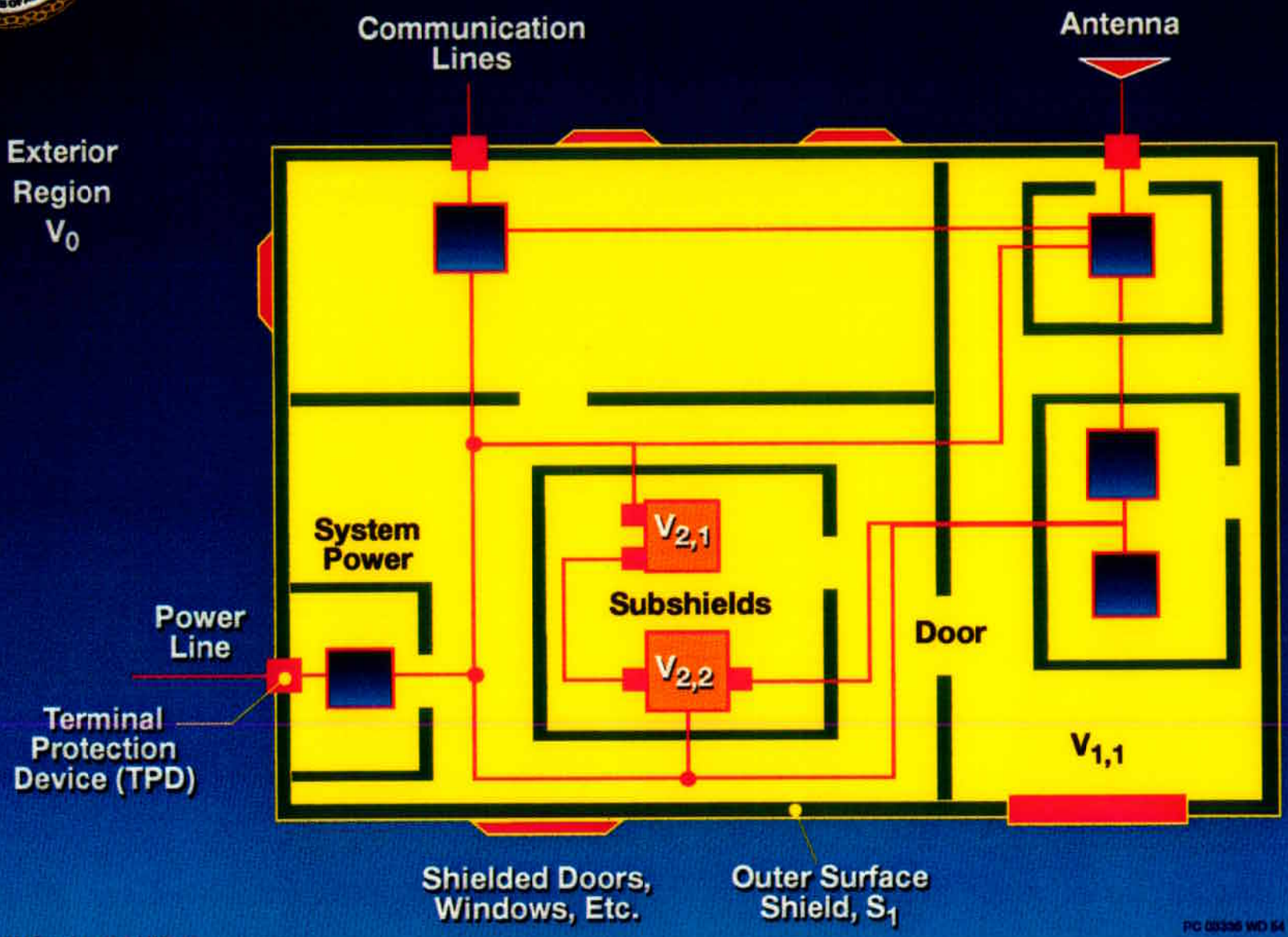

MITIGATION TECHNIQUES
INTERNAL SUBSYSTEM PROTECTION

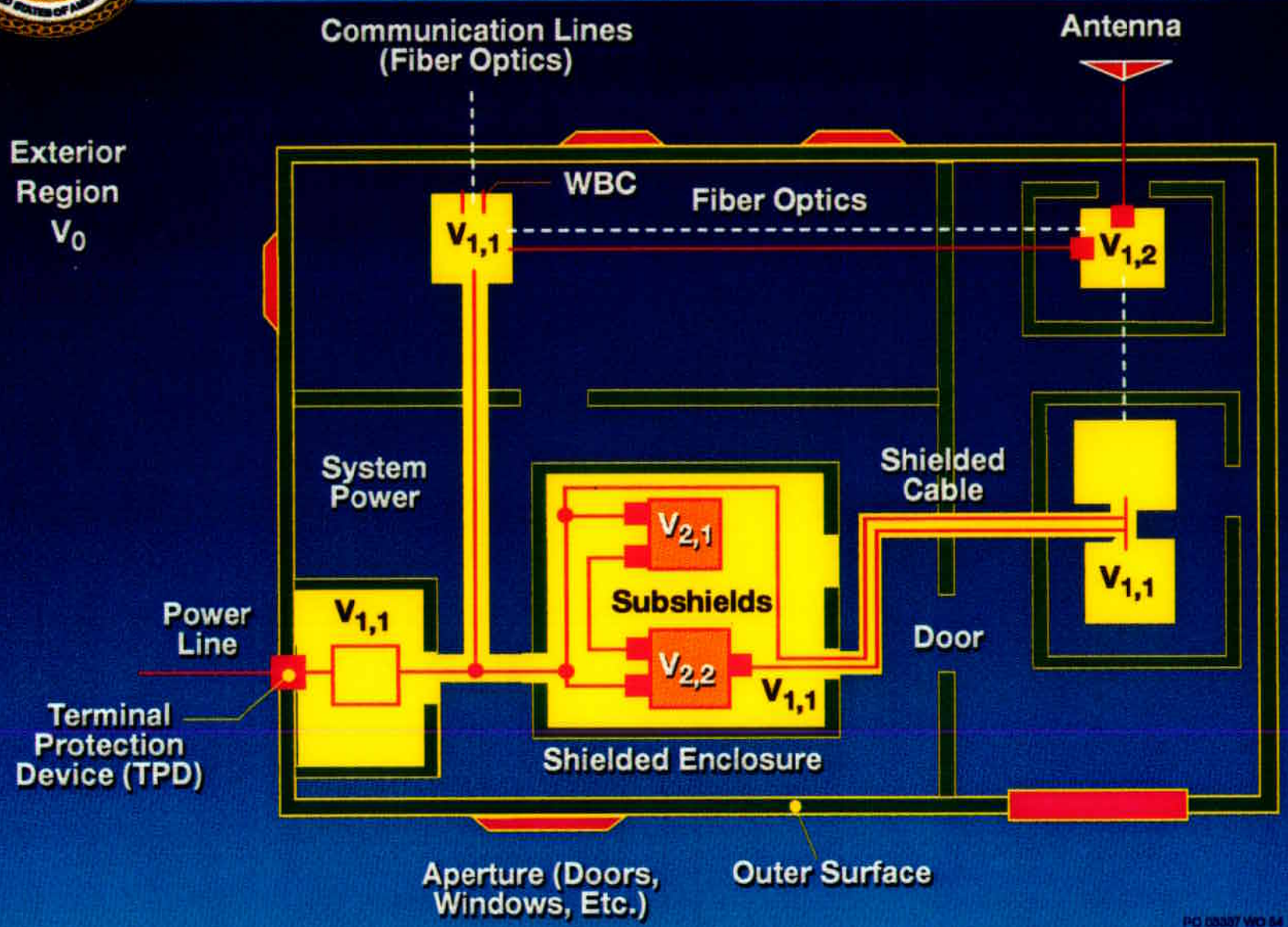

PO 03337 WO 54

MITIGATION TECHNIQUES
INTERNAL BOX PROTECTION

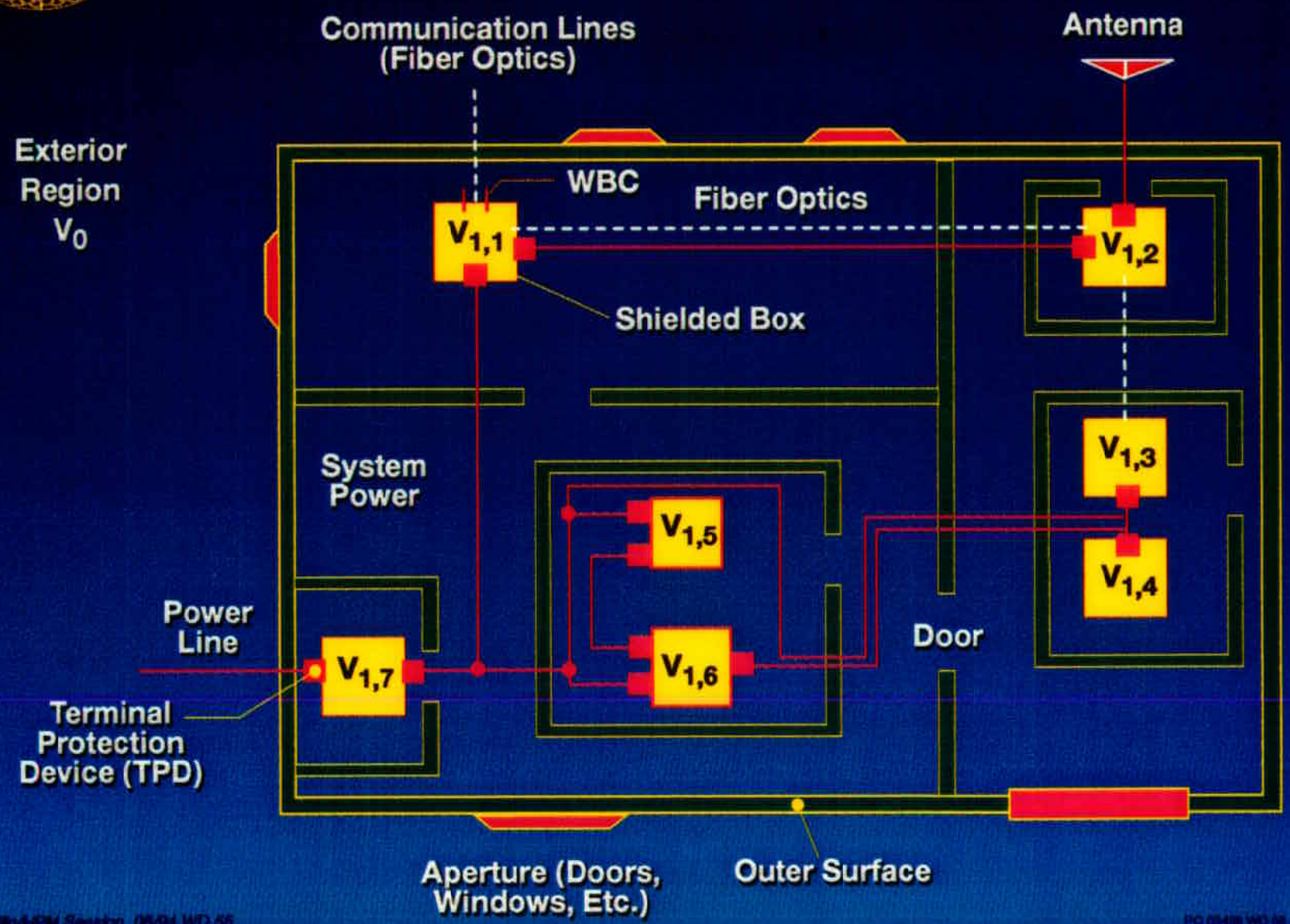

TECHNICAL BASIS
PROTECTION TECHNOLOGY

Shielding	- Lightweight materials, continuous metal
Filters	- Narrow, intermediate, and wide band, low insertion loss - Moderate to high current capacity (tens to hundreds of kiloamperes)
Nonlinear devices - MOVs - Sparkgaps - Zeners	- Fast switching (nanoseconds to subnanoseconds) - Moderate to high current capacity (tens to hundreds of kiloamperes), high power handling (hundreds of kilowatts)
Fiber Optics	- Small signal, wide band (hundreds of megahertz to a few gigahertz) (characteristics depend on system functional design)
Other materials	- Dielectric isolation - Rugged, weatherproof

TECHNICAL BASIS
VALIDATION LEVELS (DEGREES)

• No test (use operating experience)	Can tolerate failures/repairable
• Single sample test (test one item, assume all others the same)	High failure rate intolerable
• Large sample and life-cycle surveillance	Low tolerance for failure

$$\text{Tolerance for failure} \;\alpha\; \frac{1}{\text{cost of failure}}$$

VALIDATION TESTING

Selected Hardening Topology	Testing Required*			Relative Test Cost
	Box Level	Subsystem Level	System Level	
Box	✔	✔	✔	Highest
Subsystem		✔	✔	Medium
System Level			✔	Lowest

* For medium- to large-size systems with large number of boxes

GENERALIZED PROTECTION APPROACH

- Define system EM effects requirements
- Determine tolerance to system effects
- Identify and prioritize Dominant EM effects
- Develop system topological protection approach
- Design and install protection
- Validate protection
- Maintain over system lifetime

SUMMARY

- Unification of EM effects protection is vital to system reliability and is cost-effective
- Protection and validation technologies exist - no major development required
- Challenge will be to define Dominant EM effects based on system requirements and acceptable costs
- Validation testing requirements are a strong function of the topology selected
- Both military and commercial hardware must be considered