Fall October, 1963

A Tunable Highly-Selective Distortion Test-Set

Edmund Ramsay Wigan, *BBC Research Department*

A Tunable Highly-Selective Distortion Test-Set

By E. R. WIGAN, B.Sc.(Eng.), A.M.I.E.E.

A high Q circuit, obtained by positive feedback, forms the basis of a simple test-set for measuring the relative amplitudes of harmonics up to the tenth. A feature of the instrument is the rapidity with which measurements can be made.

THE technique was developed to allow rapid and accurate measurement of the first ten terms of the distortion-spectrum (1,2,3, . . . 10 kc/s) generated in a.f. equipment when subjected to a test tone of 1,000 c/s. A conventional wave analyser is not entirely suited to such work, for much time can be wasted in trying to locate and measure those terms which are of very low level—and which may in fact be entirely absent if the equipment tested employs well-balanced push-pull amplification. To avoid this search, the present apparatus has been designed on a comparison, rather than a direct-measurement basis: a local oscillator is provided which can be switched to each of the ten harmonic frequencies, the oscillation being 'locked' to the parent 1,000-c/s test tone. If then the selective amplifier is tuned to the local oscillation it will also be exactly in tune with the corresponding distortion-term, and can safely be brought to its highest possible selectivity *before measurement starts*. By this means it is ensured, even if the distortion term chosen is extremely small, that it will be located and measured within a few seconds; equally the complete absence of a harmonic term can be established with certainty. This is virtually an impossibility with a wave analyser. The analyser has, of course, a much wider frequency range than the test-set which makes measurements only within the 5% range around each of the ten harmonics.

To establish accurately, and in the presence of some degree of circuit noise, the amplitude of each of the ten distortion terms, a selective system is required which shall be capable of Q-factors between 100 and several 1,000, depending on the harmonic number (n) and the noise level, and which shall have a tuning range of 5% (say) to allow for the frequency drift or inexact tuning of the primary oscillator. To achieve the high Q-factors needed in the selective amplifier a potentially oscillatory circuit is used with the positive feedback set just short of the oscillation-point.

However, during any tuning operation the degree of feedback must be held constant within very close tolerances indeed or selectivity will be lost; this is because the *Q-factor is proportional to the inverse of the deficiency by which the loop-gain falls short of unity*. Tuning is provided by the 'bridged' Wein bridge network shown in Fig. 1; Ref. 1 sets out the theory. The special feature of this network is that, as the tuning resistor is swept over its full range, the voltage-loss through the net remains substantially constant; tuning cannot affect the Q-factor, therefore. (See Table 1.) The tuning range provided is 5% which is far wider than would be needed, in practice, to locate the crest of a high-Q resonance curve.

The viability of the measurement technique rests almost entirely upon the success achieved in making the Q-factor independent of the tuning operation, and, as Table 1 shows, the adjustments once made can be expected to remain stable for a year or more; the 'repair' referred to in the Table was the replacement of two capacitors which had drifted and altered the tuning—although not the loop-gain.

Arrangement

The block-schematic in Fig. 2 shows that the 'comparator' principle commonly adopted in transmission measuring sets has been employed with some minor variations. The unknown signal, the harmonic term, is compared with a known fraction of a locally-generated signal of the same frequency. In this

TABLE 1

Performance After More Than 12 Months' Use and After Repair of the 5-kc/s Channel

(1) Frequency setting (kc/s)	(2) Tuning Range (kc/s) Min:	(3) Max:	(4) Frequency difference (kc/s)	(5) Fine control dial setting for critical reaction (% full scale)	(6) Reaction setting difference at limits of frequency range (% full scale)
10	9·74	10·42	0·68	76	+0·5
9	8·76	9·37	0·61	65	+0·75
8	7·76	8·31	0·55	55	+0·3
7	6·77	7·24	0·47	59	<0·1
6	5·81	6·21	0·41	50	−0·1
5	4·82	5·15	0·33	39	<0·1
4	3·79	4·06	0·265	16	+1·0
3	2·89	3·09	0·2	29	<0·1
2	1·93	2·07	0·14	20	<0·1
1	0·966	1·033	0·077	6	<0·1

An entry '<0·1' in column (6) implies that Q would vary by <50 parts in 10^6 if the tuned frequency were varied by ± 5%.

test-set, however, the local oscillator (8) can be given any one of ten frequencies, selected by switch (10), which are 'locked' to the input test-tone (1 kc/s) by a 'spike' generated at (7). The a.g.c.-amplifier (6) makes sure that, if the level at (1) lies between − 15 dB and 0 dB, the spike will lock—but not distort—the oscillation. With the comparator-switch (4) to the right the selective amplifier (5) can be tuned precisely to the harmonic to be examined, and when switched to the left the harmonic amplitude (weighted as frequency^2, by elements (3)) is presented. Voltage-divider (9) is then adjusted until both positions of (4) yield the same reading on meter (12). Divider (9) is of the 3-decade type described in Ref. 2 and is readable to 1 part in 1,000, interpolations being made, when the signal is small, from the scale of VVM (12) which is arranged to be linear. High-gain amplifier (11) makes it unnecessary for (5) to deliver any but very low level signals to operate meter (12).

The filter-assembly (2a–2b) removes the 1-kc/s component of the distorted input signal and acts as a constant-resistance net of 600 Ω at all frequencies, thus correctly loading the test-object connected at (1). The 6-dB pad (2c), inserted when the 1-kc/s term is measured, copies the impedance and loss introduced by the filter network. RC oscillator (8) is tuned only 'coarsely', by capacitance change, when (10) is operated, any frequency-error being corrected by the 'spike' from (7) pulling the oscillation. The miniature c.r. oscilloscope (13) then shows a sharp sinous line; lack of synchronism makes the picture hazy and can be corrected by trimming the primary 1-k/cs test-oscillator. By counting the number of sinuosities on (13) the user can check that the correct harmonic is being observed. Top-to-bottom inversion of the picture indicates an anti-phase term; such information can be most helpful in diagnosing the source of the distortion observed.

To help in setting (5) to maximum sensitivity there is a third position of (4) (not shown) in which the chain (5–11–12) is disconnected and the input loaded by 600 Ω. The reaction is then set so that oscillation is incipient (shown on (13) as a

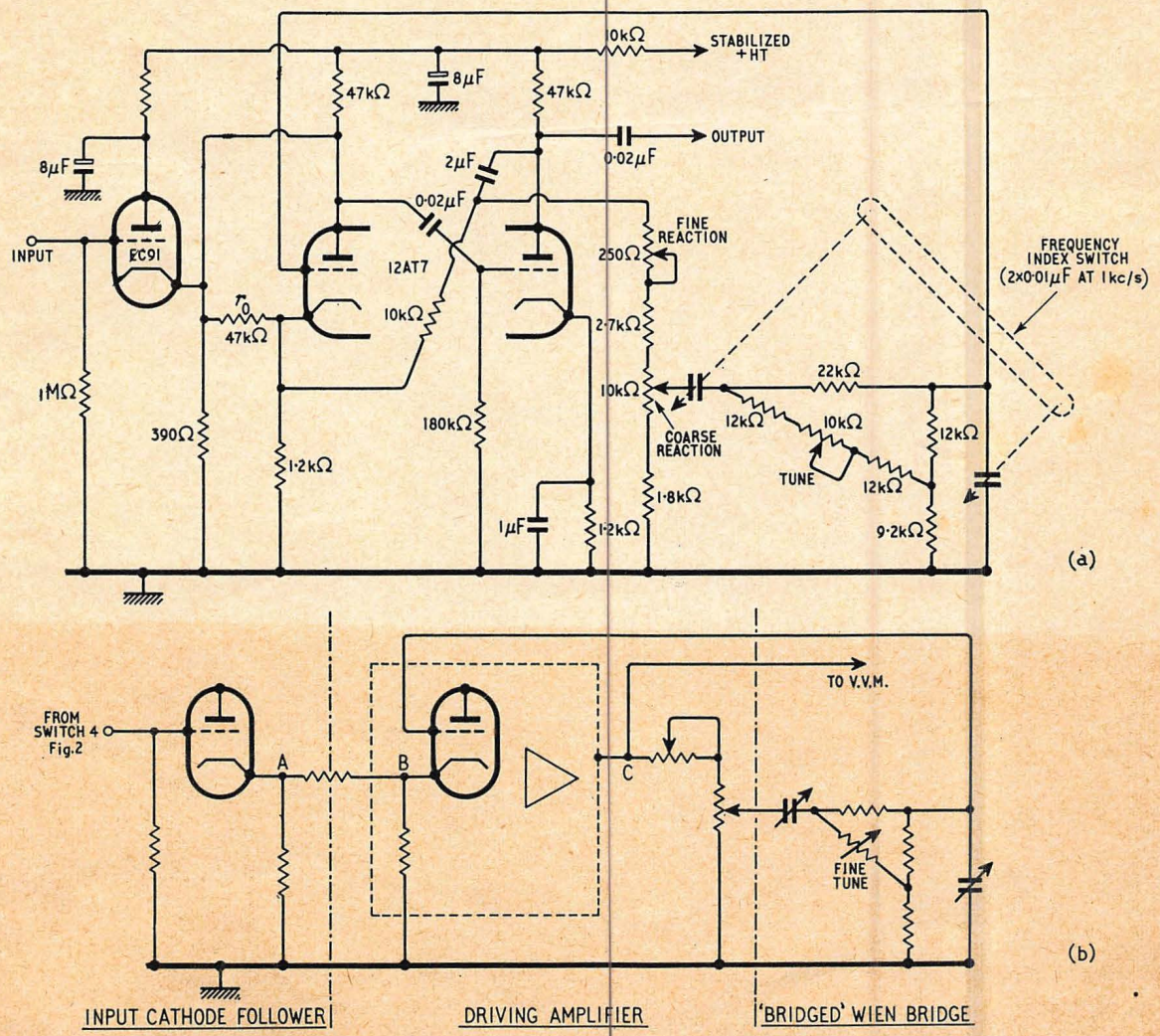

Fig. 1. Selective assembly. Each of the ten harmonics is 'coarsely' tuned by choice of capacitor and then sharply tuned by resistor adjustment in the 'bridged' Wien bridge. A second section of the selector switch, which is not shown, coarsely tunes the local oscillator to the corresponding frequency

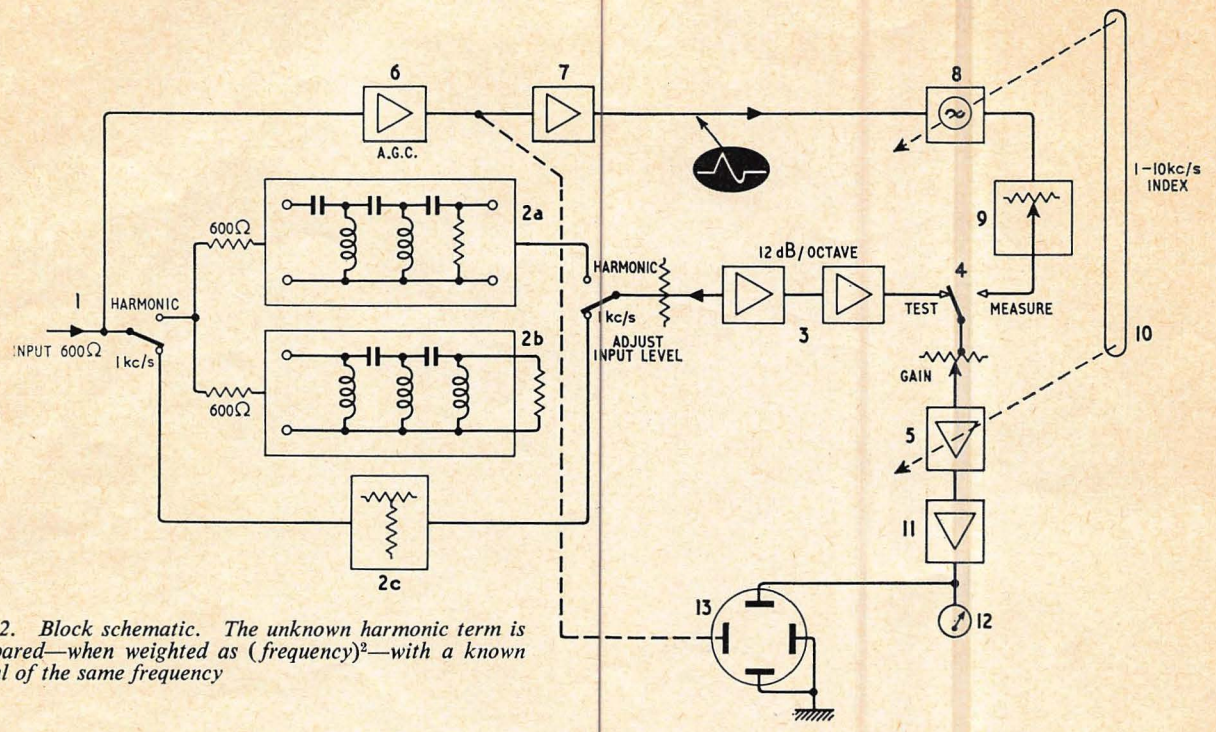

Fig. 2. Block schematic. The unknown harmonic term is compared—when weighted as (frequency)²—with a known signal of the same frequency

clean line). At the same time (5), when oscillating, can be roughly tuned by bringing the c.r.o. picture to rest.

By other switches, not shown, the meter (12) can be transferred to monitor the output of (8); another switch-contact, associated with (10), ensures that when the 1-kc/s term is being measured divider (9) is replaced by a fixed pad with the same loss as is introduced by (9) when the dials are set to 100.

With very little experience the measurement of a single distortion term can be completed in 5–10 seconds; thus the complete set of ten can be dealt with in under 2 minutes—a period short enough to justify the assumption that the same working conditions applied to each term of the harmonic series. This is a matter of some importance when tests are being made near the overload-point of the test-object, e.g. a feedback amplifier or the modulation amplifier of a high-power transmitter.

Limitations and Advantages

Advantages outweight limitations; very high Q-factors can be achieved—2,000–3,000 for instance—the system remaining stable over the period of 10 seconds or so needed for a measurement, but a price has to be paid: the selectivity falls if the output voltage V_c (at point 'C', Fig. 1) from the selective amplifier grows much larger than 50 mV. See Fig. 3.

The effect is due to the extreme sensitivity of the overall gain G of the selective system to changes in the gain G_A of the amplifier connected in the positive feedback loop. G_A falls, although very slightly, as V_c rises, because of the non-linearity of the valve transfer-characteristics. Fig. 4 shows at (a) the distortion generated in the amplifier when the positive feedback loop is broken, and at (b) the fall in gain (β) which occurs at the tuned frequency when the loop is closed. These phenomena will be dealt with more fully later, but the shape of the curves in Fig. 3 can be explained in general terms as follows:—

Let us suppose that the gain G is extremely high because reaction has been set very near the oscillation-point. Then the magnitude of G is limited only by the non-linearity in the amplifier which appears when a signal is applied. As β in

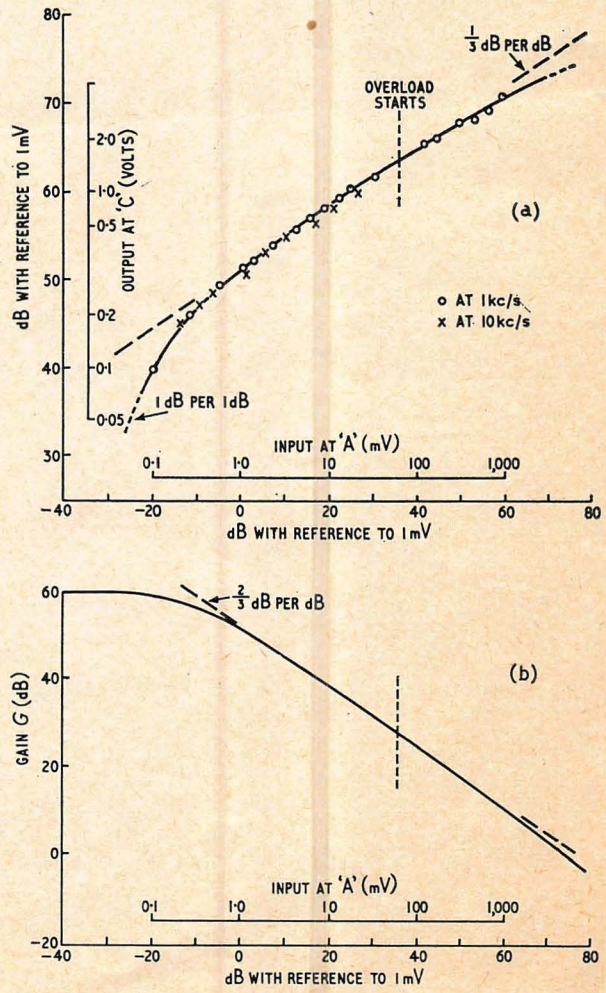

Fig. 3. Influence of distortion in the amplifier. The selective system loses gain when signal level rises

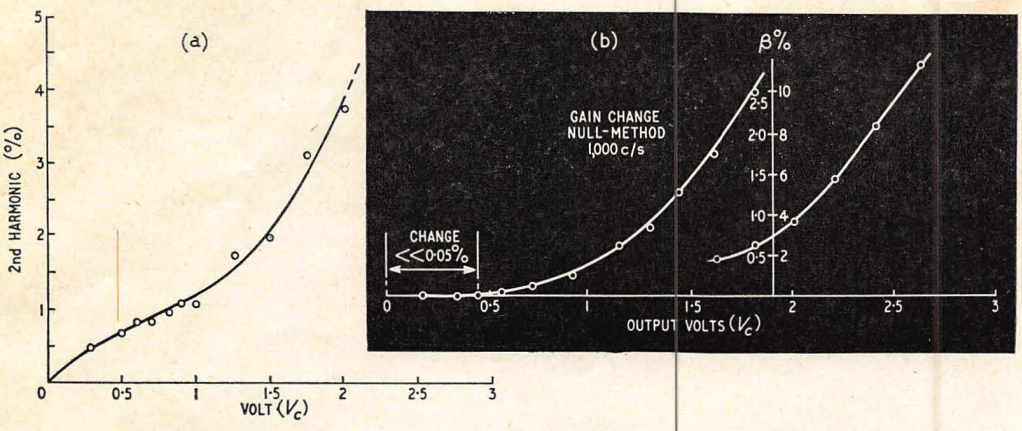

Left: Fig. 4. Amplifier performance: (a) distortion measured as second harmonic; (b) gain changes derived by a bridge method which ignores all harmonics

Below: Fig. 5. Terms used in the general analysis. Definition of primary parameters (a), reference p.ds and currents (b), parallel injection (c) and series injection (d)

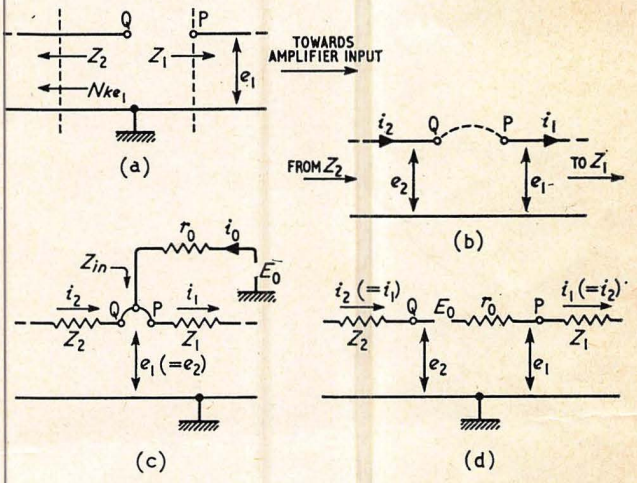

Fig. 4(b) is roughly proportional to V_c^2 it is to be expected that G will vary inversely as V_c^2. Because of this effect, when the input voltage (V_1) increases, although V_c rises, the gain G falls; thus we have approximately:—

$$G = (\text{constant})/V_c^2$$

But $$G = V_c/V_1$$

Whence $V_c^3 = (\text{constant}).V_1$, which is confirmed by the 1/3 slope of the logarithmic plot of Fig. 3 which takes control once V_1 and V_c exceed their critical values. On the other hand when V_c is < 50 mV approx. the selective system behaves very nearly linearly.

Under linear conditions the highest selectivity is possible and Fig. 6 to which such conditions apply, illustrates the outcome when the reaction control is set to three positions. (Relatively low Q-factors, i.e. < 140, made it possible to measure accurately both the in-phase and quadrature terms of the voltage vectors. This would not have been possible if Q was very high.) This diagram is discussed in detail later; here it is sufficient to notice that, at the resonant frequency ($f_0 = 990$ c/s) Fig. 6(a) demonstrates that the output voltage varies inversely as the degree of positive reaction, while the straight lines and circles of (b) and (c) confirm that the system is behaving in a linear manner. Non-linearity, due to the larger signal voltages, is evident in Fig. 7, both the lines and the circles on Fig. 6 being bent out of shape. The flattening of the circles is responsible for the loss of Q-factor, which can be seen to be divided by 10 as compared with Fig. 6.

When the test-set is in use the linear performance of Fig. 6 is operative at all times, V_c being always very small. The adoption of the 'comparator' measurement-technique ensures that V_1 never exceeds the (very small) amplitude of the 'weighted' harmonic under examination, irrespective of the Q-factor used. The 'weighting' amplifiers (3) in Fig. 2 raise an harmonic percentage p_n to a level n^2p_n and thus prevent V_1 from falling with the order (n) of the harmonic term measured; in fact when a high-grade negative feedback amplifier is tested very near to its overload-point the quantity n^2p_n tends to remain nearly constant irrespective of n. (In a well-adjusted push-pull amplifier, however, the even-order terms are depressed or missing.)

Virtually linear performance is essential to high selectivity, but on the other hand the 'compression' phenomenon of Fig. 3 can serve a useful purpose also, by protecting the meter (12) from accidental overload during preliminary adjustments. However, it will be apparent that if the Q-factor is to be capable of smooth and continuous adjustment up to the highest values, the curve of β (Fig. 4(b)) must have a *positive* slope; a completely linear amplifier would be unusable. (It should be noted that although the circuit constants of Fig. 1(a) meet the required conditions they were arrived at by trial and error and must not be treated as optimal.)

Because this instrument presents all its readings in the form n^2p_n, the summation of the nine measurements (at 2,3,...10 kc/s) yields the distortion criterion C_0, dealt with in Ref. 3 which shows that C_0 gives a measure of the audience-reaction to the objective distortion measured.

Theoretical Considerations

The combination of driving amplifier and frequency-selective network to the right of Fig. 1(b) constitutes a potentially oscillatory system, but when just short of the oscillation-point it acts as a selective amplifier. The cathode-follower to the left serves primarily as a buffer to isolate the selective system from the rest of the measuring equipment; the signal picked up by the selector-switch (4) reappears, slightly reduced, at 'A' and finally at 'B' where it influences the selective circuit. It should be noticed that the resistance coupling 'A' to 'B' is represented by r_0 and the p.d. at 'A' by E_0, in Fig. 5(c). The injection of external signals into the system by this 'parallel' arrangement is much more practical than the 'series' method of Fig. 5(d) which demands a transformer to isolate E_0 from earth.

We shall now investigate the p.ds and currents existing in Fig. 5(c), making as few assumptions as possible so that the analysis shall be of general application. The analysis starts from Fig. 5(a) where the positive feedback loop (of unspecified composition) is supposed broken at P, Q; the only assumptions made are that the input terminals of the associated amplifier lie somewhere to the right, and the output terminals somewhere to the left of the figure, a frequency-selective passive network being included in tandem in the loop. In Fig. 5(b) P and Q are shown connected in some unspecified way so that there is a through passage for i_1 and i_2.

In Fig. 5(a) any p.d. such as e_1 will meet an impedance Z_1 The amplifier will be excited by some fraction or multiple of e_1 and deliver at Q an open-circuit e.m.f. (NKe_1) which will be associated with an output impedance Z_2. N may be taken as a real number, independent of frequency and proportional to the open-circuit numerical gain of the amplifier proper, whereas K represents the loss factor arising from all the passive elements in the loop, including any amplifier gain—or 'reaction'—controls, and the frequency-selective network. K will, in general, be complex becoming real only at the resonant frequency. In general it is preferrable to make $N \gg 1$ and $K \ll 1$.

The following analysis applies to Fig. 5(c) where we have:

$$NKe_1 = i_2Z_2 + e_2 \quad (1)$$
$$e_1 = i_1Z_1 \quad (2)$$
$$e_2 = e_1 \quad (3)$$
$$i_0 = i_1 - i_2 \quad (4)$$

Eliminating e_1 and e_2 from equations (1), (2) and (3),

$$i_2/i_1 = (NK - 1)\, Z_1/Z_2 \quad (5)$$

and from (4) and (5) $\quad i_0/i_1 = 1 - (NK - 1)\, Z_1/Z_2 \quad (6)$

The input impedance at P, Q is defined as:

$$Z_{in} = e_1/i_0 \quad (7)$$

Also, from Fig. 5(c) $\quad e_1 = E_0 - i_0r_0 \quad (8)$

From (7) and (8) $\quad E_0/e_1 = 1 + r_0/Z_{in} \quad (9)$

Or, defining the gain ratio measured at P, Q as G_{PQ}

$$G_{PQ} = e_1/E_0 = Z_{in}/(r_0 + Z_{in}) \quad (10)$$

which shows that G_{PQ} will be infinite, and uncontrolled oscillation will start, when

$$Z_{in} = -r_0 \quad (11)$$

The general expression for $1/Z_{in}$ is obtained from (2) and (6) as

$$1/Z_{in} = 1/Z_1 + 1/Z_2 - NK/Z_2 \quad (12)$$

Thus, from (10) and (12)

$$G_{PQ} = (Z_2/r_0)/(1 + Z_2/Z_1 + Z_2/r_0 - NK) \quad (13)$$

showing that $G_{PQ} = \infty$ and oscillation will start when

$$NK = NK_{osc} = 1 + Z_2/Z_1 + Z_2/r_0 \quad (14)$$

In practice, when the highest gain and selectivity is required, NK is set just below this value.

The overall gain available from the complete selective system can be made greater than G_{PQ}; for instance, e_1 can be arranged to appear at the input terminals of the main amplifier, and an amplified voltage obtained from the output terminals.

Consideration of equation (6) shows that i_0 is zero when

$$NK = 1 + Z_2/Z_1 \quad (15)$$

while i_1 and i_2 continue to flow; this suggests an unstable situation, but substitution from (15) into (12) shows that Z_{in} is then infinite, which from (9) implies that e_1 assumes the value of E_0. This stabilizes all voltages and currents.

Calculation of the Selectivity

Initially we shall apply the analysis of the last section to a system such as Fig. 5(c) where the signal is injected externally from the amplifier, but later we shall convert our findings to suit the practical case of Fig. 1 where the injection is made into the negative feedback loop of the amplifier proper.

Selectivity will be derived in terms of the degree of positive feedback and the quantity m where:

$$f = (1 + m)$$

and m is the fractional deviation of f from the resonance frequency f_0.

We introduce a quantity K' which is equal to the loss-factor introduced by the 'bridged' Wien bridge of Fig. 1. As is shown in Ref. 2, when equal pairs of resistors and capacitors are used in this bridge, the loss-ratio is:—

$$K' = 1/(3 + j(n - 1/n)) \ldots \text{where } n = f/f_0$$

In particular $\quad K' = K_0 = 1/3 \ldots$ if $n = 1$; $m = 0$; i.e., at resonance.

Or $\quad K' = K_0/(1 + j2m/3) \ldots$ if $m \ll 1$; i.e., very near resonance $\quad (16)$

In applying the formulae of the last section K' alone cannot take the place of K for we must allow for the effect of the reaction-controls and write:—

$$K = K'S_0(1 - \alpha)$$

where S_0 is the loss due to that reaction-setting which initiates oscillation, and α is that fractional change in S_0 which is used in practice to obtain selective response. An approximate calculation from the circuit diagram suggests that the full sweep (100 divisions) of the 'FINE' reaction-control will produce a change of 0·05 in the loop gain; thus one division will correspond to $\alpha = 0{\cdot}0005$.

Using Equation 13 we have:—

$$1/G_{PQ} = (1 + r_0/Z_1 + r_0/Z_2) - (r_0/Z_2)NK'S_0 \quad (17)$$

which is conveniently converted to the form $A - BNK'$ where A and B are real constants if—as in Fig. 1—r_0, Z_1 and

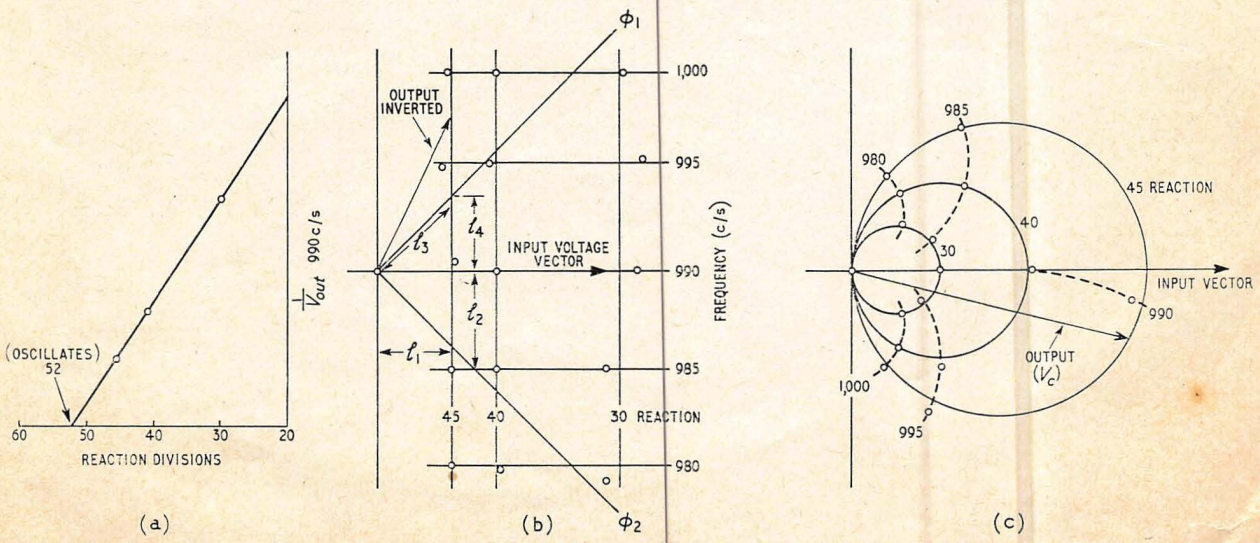

Fig. 6. High-Q resonance. (b) and (c) circles and straight lines would apply to an ideal. linear system. Here with signal level very low ($V_c \not> 8mV$) the selective amplifier system is nearly linear. (a) derivation of the oscillation point

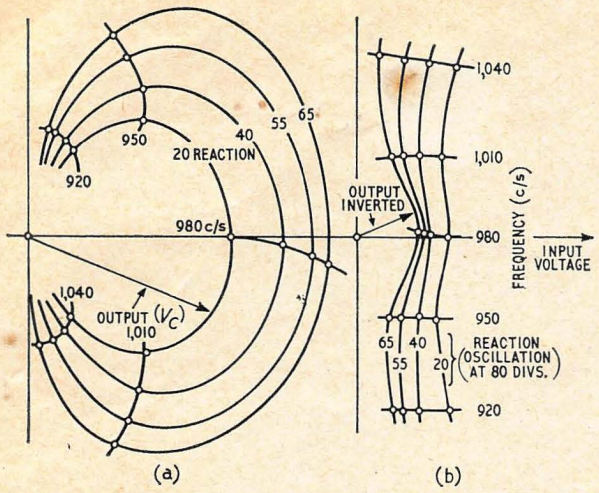

Fig. 7. Resonance under non-linear conditions in the amplifier. The circles and lines of Fig. 6 are distorted; the system loses effective gain as signal level rises

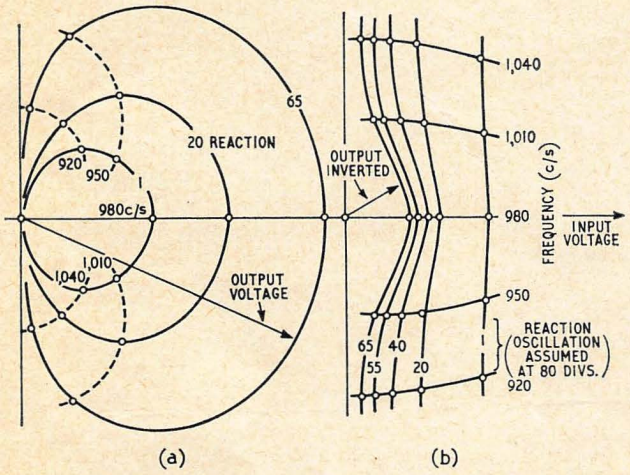

Fig. 8. Computed non-linear performance. Compare Fig. 7: computation is based on the approximation that the curve of Fig. 4(b) is a parabola

Z_2 are all resistive. The quantity K' is under the operator's control, but N is affected only by the signal amplitude as was shown earlier, and we shall write:—

$N = N_0(1 - \beta)\ldots\beta$ increasing as voltage increases.

In total we have:—

$$1/G_{PQ} = A - BN_0(1 - \alpha)(1 - \beta)K' \qquad (18)$$

In practice the reaction-setting S_0 is adjusted with no external signal present (so $\beta = 0$), and until oscillation is just incipient (so $\alpha = 0$), and then from equation (19):—

$$1/G_{PQ} = 0 = A - BN_0K'S_0$$

or

$$BN_0K'S_0 = A \qquad (19)$$

Reaction is then reduced by some amount α and the signal applied (which makes β finite) and then from (16), (18) and (19):—

$$1/G_{PQ} = A(\alpha + \beta)/(1 + j2m/3)$$

or, since $m \ll 1$ in all cases of interest the selectivity is given by:—

$$1/G_{PQ} = A(\alpha + \beta - j2m/3) \qquad (20)$$

We are now in a position to test this equation against Fig. 6—discussed in general terms earlier. Here the signals are so small that $\beta \rightarrow$ zero, and if we make $m = 0$ the gain will vary as $(1/\alpha)$ which is confirmed by Fig. 6(a).

Now from the circuit of Fig. 1(b) we have already computed that one division (out of 100) of the FINE control will change α by 5×10^{-4} approximately and with this figure we can check equation (20) against Figs. 6(b) and (c).

The horizontal lines are at 5-c/s intervals and as $f_0 = 990$ c/s they correspond to intervals of $m = 0{\cdot}00505$. The verticals should be in proportion to the reaction-intervals, so by measurement on the figure we can check the ratio $(2m/3)/\alpha$; the diagram gives 0·96 and the just listed yield 1·33—a discrepancy which can be put down to the rough estimate of α from the circuit constants, for in all other respects the circles and straight lines of the figures conform closely to equation (20).

The Q-factor for each reaction-setting is found from the two lines ϕ_1 and ϕ_2 of 45° slope. For instance, with reaction setting 45 divisions $l_1 = l_4 = l_3/\sqrt{2}$ and by measurement on the diagram l_4 is found to correspond to 3·6 c/s $= (f_0 - f)$. So $Q = 137{\cdot}2$. Similar checks on the other verticals show that on the average $Q\alpha = 0{\cdot}48$. The selective amplifier is found to be stable when $\alpha < 0{\cdot}0005$ so $Q > 1{,}000$ is feasible, and in fact, provided there are no surges of mains-voltage, $Q = 2{,}000$ or even 3,000 is often achieved for the 10 seconds or so needed for measurement.

When $V_c \gg 50$ mV Figs. 7 and 8 apply. Fig. 8 has been calculated from equation (20) using values of β slightly different from Fig. 4(b) because a parabolic form of the curve had to be assumed when making the computation. The agreement with Fig. 7, though not exact, serves as a further check on equation (20).

Signal Injection

It would appear from Fig. 1(b) that V_c was in antiphase with V_A and that, since this would alter the sign of N in the general equations, the behaviour of the network would be modified radically. However, although the analysis is modified somewhat, the outcome is the same. The most noticeable effect of the change is that β has to be written into equations such as (18) *et seq.* as reduced in proportion to the loss of gain due to the negative feedback; also we have to substitute for N_0 the quantity $q/(qK' - 1)$, where q is the 'internal' gain of the amplifier (i.e., between the point C and the input grid, with the negative feedback disconnected) and K' is, as before, the loss in the RC network and the reaction-controls.

There is no space for detailed proof, but it can be shown that if we substitute $q/(qK'-1) = T$ for N in the general analysis, all the equations (1–15) will apply. (This will be true of any other amplifier in which the feedback path has the same general proportions as in Fig. 1(a), the internal gain being $\gg 3{\cdot}0$.)

Now equations (13) and (14) show that $G_{PQ} = \infty$ only when NK has the particular value NK_{osc}; the system is stable at both lower and *higher* values of NK but when K is varied NK cannot pass from the lower to the higher without passing through the oscillation-point and thus the higher values cannot be reached. In the case of T this situation is reversed: as K' is increased from zero T, starting from zero, becomes negative, passes through ∞ when $K' = 1/q$, and thereafter becomes and remains positive. The critical value of T_{osc} is therefore approached from the *higher* instead of the lower side. All working values of G_{PQ} are therefore negative, and for selective amplification T is adjusted—by altering K'—until T slightly exceeds the critical value.

Acknowledgments

Thanks are due to the Director of Engineering of the B.B.C. for permission to publish these notes, and to my colleague, Mr. J. W. Head, for assistance in presenting the mathematical auguments.

References

[1] Wigan, E. R., *Electronic Technology*, June 1960, p. 223.
[2] Wigan, E. R., *Electronic Technology*, September 1960, p. 560.
[3] Wigan, E. R., *Electronic Technology*, May 1961, p. 163.